

Watts Air Preparation Systems & Accessories

QUBE, General Line, QIX, Miniature, Stainless, Injection Lubricators & Accessories

Catalog 0305-2

aerospace
climate control
electromechanical
filtration
fluid & gas handling
hydraulics
pneumatics
process control
sealing & shielding

Parker

ENGINEERING YOUR SUCCESS.

Notes & Caution

⚠ WARNING

FAILURE OR IMPROPER SELECTION OR IMPROPER USE OF THE PRODUCTS AND/OR SYSTEMS DESCRIBED HEREIN OR RELATED ITEMS CAN CAUSE DEATH, PERSONAL INJURY AND PROPERTY DAMAGE.

This document and other information from Parker Hannifin Corporation, its subsidiaries and authorized distributors provide product and/or system options for further investigation by users having technical expertise. It is important that you analyze all aspects of your application including consequences of any failure, and review the information concerning the product or system in the current product catalog. Due to the variety of operating conditions and applications for these products or systems, the user, through its own analysis and testing, is solely responsible for making the final selection of the products and systems and assuring that all performance, safety and warning requirements of the application are met.

The products described herein, including without limitation, product features, specifications, designs, availability and pricing, are subject to change by Parker Hannifin Corporation and its subsidiaries at any time without notice.

Offer of Sale

The items described in this document are hereby offered for sale by Parker Hannifin Corporation, its subsidiaries or its authorized distributors. This offer and its acceptance are governed by the provisions stated on the separate page of this document entitled “Offer of Sale”.

© Copyright 2008, 2001 Parker Hannifin Corporation. All Rights Reserved

Table of Contents

QUBE Modular FRL System		A QUBE
Air Preparation Units	***General Line, QIX, High Efficiency Filters, Dial & Precision Regulators***	B Air Preparation Units
Miniature FRLs		C Miniature FRLs
Stainless Steel FRLs		D Stainless Steel FRLs
Injection Lubricators		E Injection Lubericators
Accessories	***Flow Controls & Accessories, Control Panel Products, Sensing, "LV" / "EZ", Ball Valves / Plug Valves / Drain Cocks, Safety Blow Guns, Fittings & Hose, Fittings & Tubing, Quick Couplings***	F Accessories
Safety Guide, Offer of Sale		G Safety Guide, Offer of Sale

Pneumatic Division
Richland, Michigan
www.wattsfluidair.com

Air Preparation Units

General Line, QIX, High Efficiency Filters, Dial & Precision Regulators

Section B

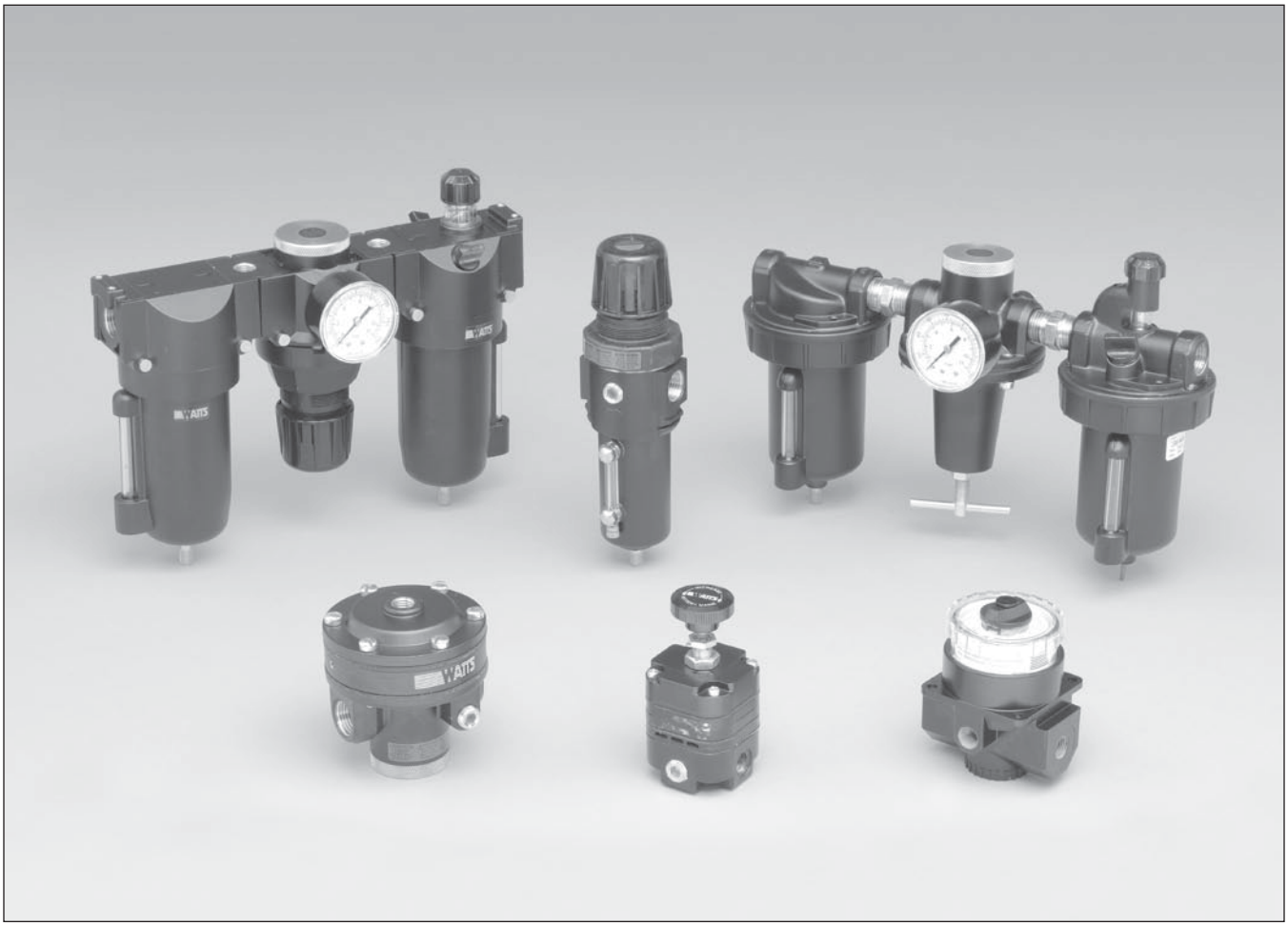

Pneumatic Division
Richland, Michigan
www.wattsfluidair.com

Notes & Caution

B

⚠ CAUTION:

Polycarbonate bowls and sight dome, being transparent and tough, are ideal for use with Filters and Lubricators. They are suitable for use in normal industrial environments, but should not be located in areas where they could be subjected to direct sunlight, an impact blow, nor temperatures outside of the rated range. As with most plastics, some chemicals can cause damage. Polycarbonate bowls and sight dome should not be exposed to chlorinated hydro-carbons, ketones, esters and certain alcohols. They should not be used in air systems where compressors are lubricated with fire-resistant fluids such as phosphate ester and di-ester types.

Metal bowls are recommended where ambient and/or media conditions are not compatible with polycarbonate bowls. Metal bowls resist the action of most such solvents, but should not be used where strong acids or bases are present or in salt laden atmospheres. Consult the factory for specific recommendations where these conditions exist.

TO CLEAN POLYCARBONATE BOWLS USE MILD SOAP AND WATER ONLY! DO NOT use cleansing agents such as acetone, benzene, carbon tetrachloride, gasoline, toluene, etc., which are damaging to this plastic.

Metal bowl guards are recommended for all applications.

Pneumatic Division
Richland, Michigan
www.wattsfluidair.com

Table of Contents

General Information - Particulate & Coalescing Filters B4-B5
General Purpose Filters B6-B9
Standard Filters B10-B15
Coalescing Filter B16-B19
Desiccant Dryers B20-B21
General Information - Regulators B22-B23
General Purpose Regulators B24-B25
Standard Regulators B26-B29
Pilot Operated Regulators B30-B35
Dial Regulators B36-B43
Precision Regulators B44-B49
Electronic Proportional Regulators B50-B51
General Information - Lubricators B52-B53
General Purpose Lubricators B54-B57
Standard Series Lubricators B58-B61
Mist Lubricators B62-B63
General Purpose Filter Regulators B64-B65
Standard Combinations B66-B67
QIX Modular FRL System B68-B69
QIX Particulate & Coalescing Filters B70-B71
QIX Regulators B72-B73
QIX Lubricators B74-B75
QIX Filter / Regulators B76-B77
QIX Combinations B78
QIX Accessories B79
In-Line Bronze Filters B80
Tank Drains B81
WMPS32 Pressure Sensor B82-B84

B

Particulate and Coalescing Filters

B

Filtration

The average 10-hp compressor handles four million cubic inches of air per hour. This air can contain billions of contaminating particles.

At high concentration and high speed, these particles can be extremely harmful. They block orifices, erode components, and clog clearances between moving parts.

In addition, when ambient air is drawn into a compressor, it can, depending on weather conditions, have relative humidity up to 100 percent. As air is compressed and cooled, some water vapor[1] condenses out as free water, and even with a compressor aftercooler, some moisture is swept downstream into the air system. This may result in rusted pneumatic tools and components, contaminated lubricants, and frozen air lines during low temperature periods.

Other types of foreign matter in air lines include: impurities generated within the air line, such as wear particles, pipe scale and rust; construction and assembly debris; and contaminants introduced into the air system during maintenance or through leakage passages.

All these contaminants, which are of a size to cause air stream problems, should be removed by the filter.

1 Water vapor, which is a gas, is not a contaminant in pneumatic systems until it condenses.

How to Select the Proper Filter

Filter element rating is the prime selection criterion. This rating must match the requirements of all downstream components. Next, the flow capacity and pressure rating of the filter should be considered. Finally, port size should match system piping to avoid unnecessary pressure drops through restricting adapters.

Bowl material and the type of drain for the application are other choices to be made.

The first step in choosing a filter is to determine the filtration requirements of the most critical components used in that system.

Contamination particle size is measured in micrometers. A micrometer is one millionth of a meter or 0.000039 inches. Frequently, micrometer is abbreviated as micron or symbolized by the Greek letter µ. Particle-removing filter elements are rated[2] according to the particle size they will trap. For most industrial applications, filter elements rated at 40 microns are adequate. When necessary, filtration as low as 5 microns or finer can be provided. Remember, however, that finer filtration increases the pressure drop through the element. As micron size rating varies, so does the size and type of filter.

Most oils entrained in a compressed air stream are in the form of tiny mist or aerosol droplets which can pass through a standard industrial filter element. If it is necessary to remove these aerosols, an oil-removal type coalescing filter can be used. The sub-micron oil particles which escape an oil-removal filter should have no detrimental effect on industrial pneumatic components. But if these particles must be removed for applications such as spray painting, a coalescing type element should be used.

2 The inexact nominal filter element rating indicates that most particles that size or larger will be trapped. The absolute rating indicates that all particles that size or larger will be trapped.

Filter Construction

Most pneumatic filters consist of two basic elements: a die-cast body, into which the inlet and outlet piping is connected, and a sealed removable bowl which contains collected contaminants.

The bowl is fitted with a drain mechanism to remove liquids before they rise to the baffle level. The drain system usually operates while the filter is under pressure, but the unit must be exhausted to remove the bowl for cleaning and element service. The piping need not be disturbed

Generally a transparent bowl is the most convenient because it provides easy visual inspection of the sump level. However, hostile environment, higher pressure, or higher temperature may require a metal bowl for safety.

The most common plastic used for bowls is polycarbonate. This material performs satisfactorily for air pressures below 150 PSIG and temperatures between 40° and 120° F. Watts offers polyethylene bowl guards for added safety.

As the pressure or temperature requirement increases, you may have to specify a metal bowl with sight gauge. For extreme conditions, it is recommended that the sight gauge be eliminated. (Please refer to the individual model descriptions for specifications on bowls.)

Thus, the environment determines the choice of bowl. Polycarbonates offer great strength and visibility, but can be attacked by certain chemicals. Metal bowls offer the highest pressure and temperature rating, and provide superior protection when installed in an environment containing chemicals that are incompatible with polycarbonate.

Filter Operation

When pressurized air enters a typical filter body. The curved inlet and deflector direct the incoming air in a downward whirling pattern. Centrifugal force hurls the larger solid and liquid water particles outward where they collect on the inner surface of the filter bowl. The particles spiral down past a baffle into a quiet chamber. The baffle prevents turbulent air in the upper bowl from re-entraining liquid contaminants and carrying them downstream.

Then the dry, cleaner air follows a convoluted path through the filter element, where finer solid particles are filtered out. Finally, filtered air passes up the center of the element and out the discharge port.

Particulate and Coalescing Filters

⚠Warning

The plastic material used to manufacture the plastic bowls, and the sight gauge on metal bowls, may be attacked by certain chemicals. Do not use this filter on systems with air supplied by a compressor lubricated with synthetic oils or oils containing phosphate esters or chlorinated hydrocarbons. These oils can carry over into the air lines and chemically attack and possibly rupture the bowl or sight gauge. Also, do not expose the bowl or sight gauge to materials such as carbon tetrachloride, trichlorethylene, acetone, paint thinner, cleaning fluids, or other harmful materials, for they too will cause the plastic to craze and/or rupture. For use in environments where these, or any, chemicals may be present, consult the factory for approval.

Coalescing Filters

These high-efficiency filters operate on a somewhat different principle than particulate air filters. The key difference is in the element, where a fiber network is narrowly spaced to trap smaller contaminants. The special fibers hold any liquid particle which contacts them.

Pre-filtered (A particulate filter must be used prior to a coalescing filter) air enters the cylindrical element at the center. As it flows through the element, particles are captured by three different mechanisms: direct interception as particles impinge on the fibers; inertial impaction as particles are thrown against fibers by the turbulent air stream; and diffusion as smaller particles vibrate with Brownian movement to collide with fibers and other particles. As a result, coalescing elements can capture particles smaller than the nominal size of the flow passages through the element.

Collected liquid migrates to the crossing points of the fibers where larger drops form or coalesce. Pressure differential through the element then forces these drops to the downstream surface of the element where they gravitate downward to the sump.

The filtered air then exits through the outlet port.

It is very important that the air be pre-filtered, as larger contaminants tend to block the passages between fibers, reducing the efficiency of the coalescing element.

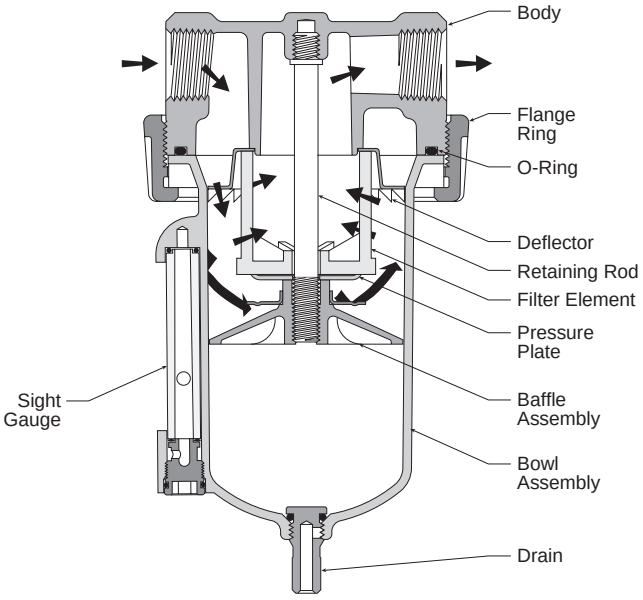

Particulate Filters

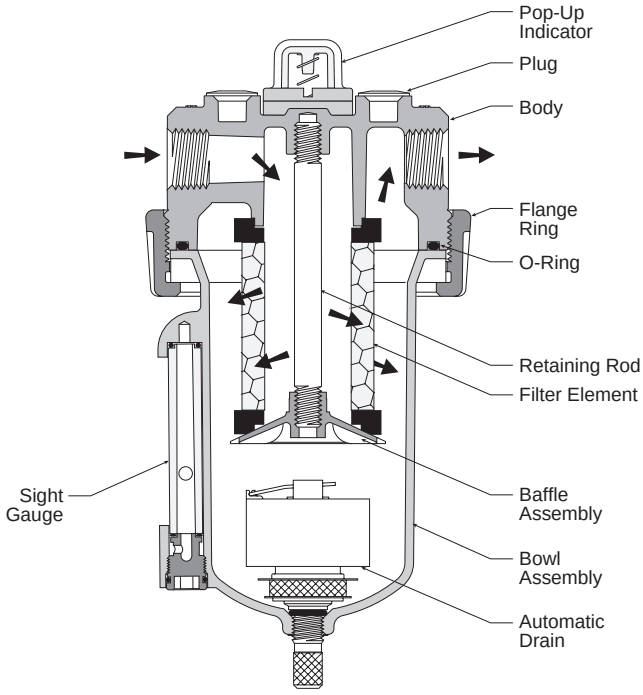

Coalescing Filters

B

Pneumatic Division
Richland, Michigan
www.wattsfluidair.com

F602 General Purpose Filters

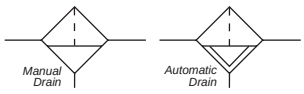

Features

- Excellent Water Removal Efficiency
- For Heavy Duty Applications with Minimum Pressure Drop Requirement
- Unique Deflector Plate that Creates Swirling of the Air Stream Ensuring Maximum Water and Dirt Separation
- Large Filter Element Surface Guarantees Low Pressure Drop and Increased Element Life
- 40 Micron Filter Element Standard, 5 Micron Available
- Metal Bowl with Sight Gauge Standard
- Twist Drain as Standard, Optional Auto Drain
- Large Bowl Capacity
- High Flow: 1/4" - 45 SCFM§
  3/8" - 68 SCFM§



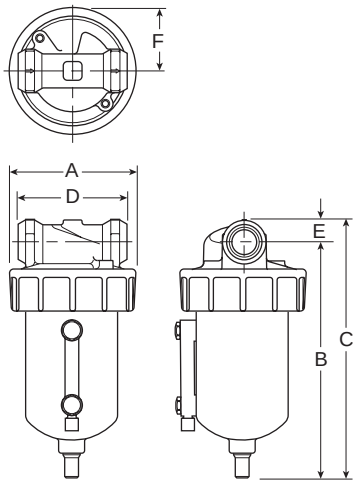

Port Size	NPT		BSPP	
	Manual Twist Drain	Internal Auto Drain	Manual Twist Drain	Internal Auto Drain
Polycarbonate Bowl* / Plastic Guard				
1/4"	**F602-02BJ**	**F602-02BJR**	F602G02BJ	F602G02BJR
3/8"	**F602-03BJ**	**F602-03BJR**	F602G03BJ	F602G03BJR
Metal Bowl / Sight Gauge				
1/4"	**F602-02WJ**	**F602-02WJR**	F602G02WJ	F602G02WJR
3/8"	**F602-03WJ**	**F602-03WJR**	F602G03WJ	F602G03WJR

Bold Items are Most Popular.
For other models refer to ordering information below.

*** For polycarbonate bowl see Caution on page B2.**

§ SCFM = Standard cubic feet per minute at 100 PSIG inlet, and 5 PSIG pressure drop with 40 micron element.

F602 Filter Dimensions					
A	B	C	D	E	F
F602-02B, F602-03B					
2.90 (74)	5.53 (140)	6.05 (154)	2.50 (64)	0.52 (13)	1.46 (37)
F602-02W, F602-03W					
2.91 (74)	5.37 (136)	5.89 (150)	2.50 (64)	0.52 (13)	1.46 (37)

inches
(mm)

Ordering Information

F	602	—	02	W	J		/**

Port Threads
- **— NPT**
- G BSPP

Port Size
- **02 1/4 Inch**
- **03 3/8 Inch**

Bowl
- B Polycarbonate with Plastic Bowl Guard
- **W Metal with Sight Gauge**

Elements
- G 5 Micron
- **J 40 Micron**

Drains and Options
- **Blank Manual Twist Drain**
- R Internal Auto Drain
- S Automatic Pulse Drain (For Polycarbonate Bowls [B] Only)
- U Semi-Auto Drain
- X11 No Internal Parts

Engineering Change Designator
- Will be entered at factory.

BOLD ITEMS ARE MOST POPULAR.

Pneumatic Division
Richland, Michigan
www.wattsfluidair.com

Technical Information

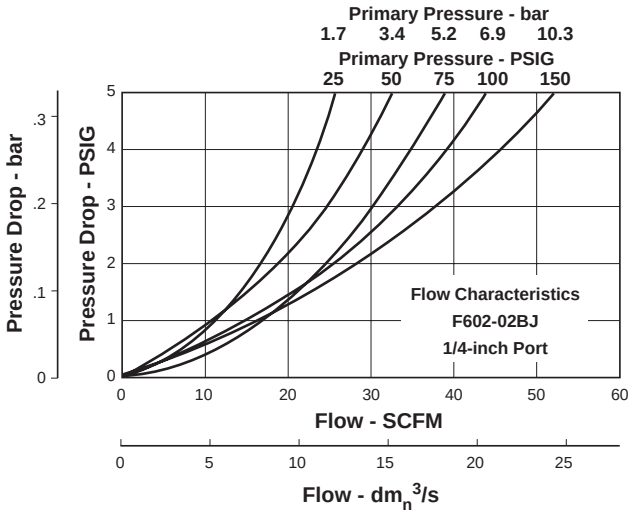

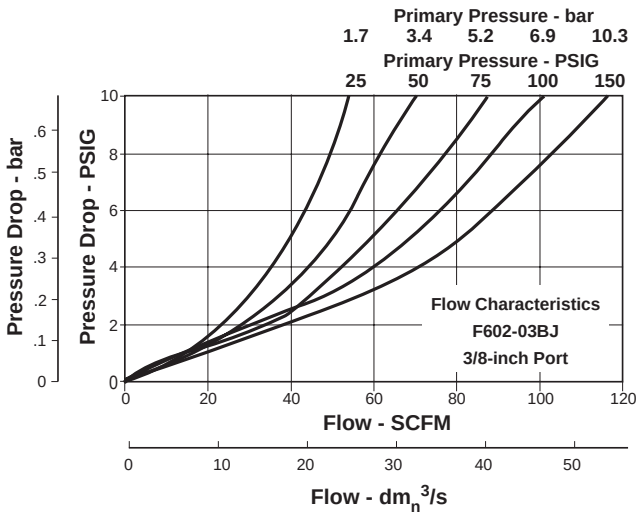

B

F602 Filter Kits & Accessories

Bowl Kits –
- Metal with Sight Gauge (W) BK605WY
- Polycarbonate (B) BK602Y

Drain Kits –
- Internal Auto (All) SA602MD
- Manual Twist (All) SA600Y7-1
- Automatic Pulse (B) RK602SY
- Semi-Automatic "Overnight" Drain SA602A7
  (Drains automatically under zero pressure)

Filter Element Kits –
- 5 Micron (B,W) EK602VY
- 40 Micron (B,W) EK602Y

Mounting Bracket Kit ..... (All) SAF602-0571

Repair Kits –
- Deflector, Secondary Baffle, Primary Baffle, and Retaining Rod (B,W) RK602Y
- Internal Auto Drain (All) RK602MD
- Metal Bowl with Sight Gauge (W) RKB605WY

Specifications

Bowl Capacity ..... 5 Ounces

Port Threads ..... 1/4, 3/8 Inch

Pressure & Temperature Ratings –
- Polycarbonate Bowl ..... 0 to 150 PSIG (0 to 10.2 bar)
  40°F to 125°F (4.4°C to 52°C)
- Metal Bowl ..... 0 to 250 PSIG (0 to 17.2 bar)
  40°F to 150°F (4.4°C to 65.6°C)
  (With Internal Auto Drain 20 to 175 PSIG (1.4 to 11.9 bar)

Weight –
- Polycarbonate Bowl ..... 1.5 lb. (0.68 kg) / Unit
  18 lb. (8.16 kg) / 12-Unit Master Pack
- Metal Bowl ..... 1.8 lb. (0.82 kg) / Unit
  22 lb. (9.98 kg) / 12-Unit Master Pack

Materials of Construction

Body ..... Zinc

Bowls –
- (B) ..... Polycarbonate Polycarbonate
- (W) ..... Metal (Zinc) with Sight Gauge

Bowl Guards ..... Plastic

Drain –
- Manual Twist & Overnight ..... Brass
- Internal Auto & Piston ..... Acetal

Filter Elements –
- 40 Micron (Standard) ..... Polypropylene
- 5 Micron (Optional) ..... Polypropylene

Seals ..... Buna N

Sight Gauge ..... Nylon

Pneumatic Division
Richland, Michigan
www.wattsfluidair.com

F602 General Purpose Filters

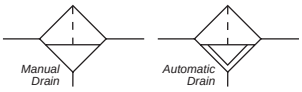



Features

- Excellent Water Removal Efficiency
- For Heavy Duty Applications with Minimum Pressure Drop Requirement
- Unique Deflector Plate that Creates Swirling of the Air Stream Ensuring Maximum Water and Dirt Separation
- Large Filter Element Surface Guarantees Low Pressure Drop and Increased Element Life
- 40 Micron Filter Element Standard, 5 Micron Available
- Metal Bowl with Sight Gauge Standard
- Twist Drain as Standard, Optional Auto Drain
- Large Bowl Capacity
- Optional High Capacity Bowl(s) Available
- High Flow: 1/2" - 90 SCFM[§]

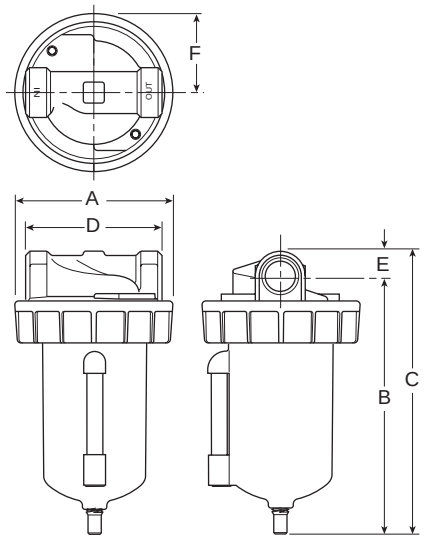

Port Size	NPT		BSPP	
	Manual Twist Drain	Internal Auto Drain	Manual Twist Drain	Internal Auto Drain
Polycarbonate Bowl* / Plastic Guard				
1/2"	**F602-04BJ**	**F602-04BJR**	F602G04BJ	F602G04BJR
Metal Bowl / Sight Gauge				
1/2"	**F602-04WJ**	**F602-04WJR**	F602G04WJ	F602G04WJR
Aluminum Bowl 16 oz. without Sight Gauge				
1/2"	**F602-04EJ**	**F602-04EJR**	F602G04EJ	F602G04EJR

Bold Items are Most Popular.
For other models refer to ordering information below.

*** For polycarbonate bowl see Caution on page B2.**

[§] SCFM = Standard cubic feet per minute at 100 PSIG inlet, and 5 PSIG pressure drop with 40 micron element.

F602 Filter Dimensions					
A	**B**	**C**	**D**	**E**	**F**
F602-04B					
3.77 (96)	5.97 (152)	6.56 (167)	3.25 (83)	0.59 (15)	1.88 (48)
F602-04E					
3.79 (96)	9.30 (236)	9.89 (251)	3.25 (83)	0.59 (15)	1.90 (48)
F602-04W					
3.77 (96)	6.12 (156)	6.71 (170)	3.25 (83)	0.59 (15)	1.88 (48)

inches
(mm)

Ordering Information

F	602	—	04	W	J		/**

Port Threads
- **— NPT**
- G BSPP

Port Size
- **04 1/2 Inch**

Bowl
- B 8 oz. Polycarbonate with Plastic Bowl Guard
- E 16 oz. Large Capacity without Sight Gauge
- **W 8 oz. Metal with Sight Gauge**

Elements
- G 5 Micron
- **J 40 Micron**

Drains and Options
- **Blank Manual Twist Drain**
- Q External Heavy Duty Auto Drain
- R Internal Auto Drain
- U Semi-Auto Drain

Engineering Change Designator
- Will be entered at factory.

BOLD ITEMS ARE MOST POPULAR.

Pneumatic Division
Richland, Michigan
www.wattsfluidair.com

Technical Information

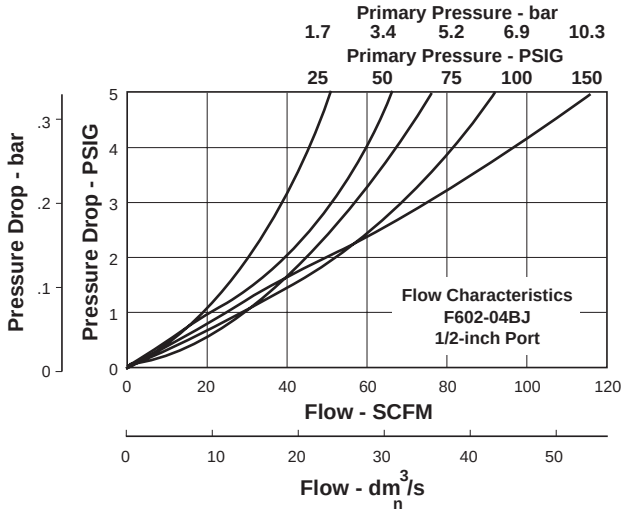

"Q" Option External Heavy Duty Auto Drain SA602D / SA603D

For heavy duty applications where the filter is being used to remove large volumes of liquid and/or particulate matter from the airstream, the external automatic drain ("Q" option) should be used.

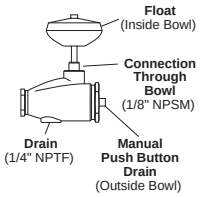

F602 Filter Kits & Accessories

Bowl Kits –
- Aluminum (E) BK603A
- Metal with Sight Gauge (W) BK605WA
- Polycarbonate with Plastic Bowl Guard (B) BK602A

Drain Kits –
- External Auto (B,W) SA602D
- External Auto (E) SA603D
- Internal Auto (All) SA602MD
- Manual Twist (All) SA600Y7-1
- Semi-Automatic "Overnight" Drain SA602A7
  (Drains automatically under zero pressure)

Filter Element Kits –
- 5 Micron (All) EK602VA
- 40 Micron (All) EK602A

Mounting Bracket Kit ..... (All) SAF602-0572

Repair Kits –
- Deflector, Baffle Assembly, and Retaining Rod (All) RK602A
- External Auto Drain (All) RK602D
- Internal Auto Drain (All) RK602MD
- Metal Bowl with Sight Gauge (W) RKB605WA

Specifications

Bowl Capacity –
- (B, W) ..... 8 Ounces
- (E) ..... 16 Ounces

Port Threads ..... 1/2 Inch

( ) = BOWL TYPE

Pressure & Temperature Ratings –

Polycarbonate Bowl (B) ..... 0 to 150 PSIG (0 to 10.2 bar)
40°F to 125°F (4.4°C to 52°C)

Metal Bowl (W) ..... 0 to 250 PSIG (0 to 17.2 bar)
40°F to 150°F (4.4°C to 65.6°C)

Aluminum Bowl (E) ..... 0 to 300 PSIG (0 to 20.4 bar)
40°F to 150°F (4.4°C to 65.6°C)

With Internal Auto Drain (R) ..... 20 to 175 PSIG (1.4 to 11.9 bar)
40°F to 125°F (4.4°C to 52°C)

With External Auto Drain (Q) ..... 0 to 250 PSIG (0 to 17.2 bar)
40°F to 150°F (4.4°C to 65.6°C)
(Except with Polycarbonate "B" Bowl - See bowl limits)

Weight –

Polycarbonate Bowl (B) ..... 2.4 lb. (1.09 kg) / Unit
19 lb. (8.62 kg) / 8-Unit Master Pack

Metal Bowl (W) ..... 2.8 lb. (1.27 kg) / Unit
22 lb. (9.98 kg) / 8-Unit Master Pack

Aluminum Bowl (E) ..... 3.6 lb. (1.63 kg) / Unit
29 lb. (13.15 kg) / 8-Unit Master Pack

Materials of Construction

Body ..... Zinc

Bowls –
- (B) ..... Polycarbonate Polycarbonate
- (W) ..... Metal (Zinc)
- (E) ..... Aluminum

Bowl Guards ..... Plastic

Drain –
- Manual Twist & Overnight ..... Brass
- Internal Auto ..... Acetal

Filter Elements –
- 40 Micron (Standard) ..... Polypropylene
- 5 Micron (Optional) ..... Polypropylene

Seals ..... Nitrile

Sight Gauge ..... Nylon

F602 Standard Filters

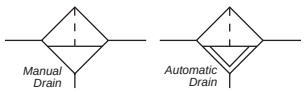



Features

- Excellent Water Removal Efficiency
- For Heavy Duty Applications with Minimum Pressure Drop Requirement
- Unique Deflector Plate that Creates Swirling of the Air Stream Ensuring Maximum Water and Dirt Separation
- Large Filter Element Surface Guarantees Low Pressure Drop and Increased Element Life
- 40 Micron Filter Element Standard, 5 Micron Available
- Metal Bowl with Sight Gauge Standard
- Twist Drain as Standard, Optional Auto Drain
- Large Bowl Capacity
- Optional High Capacity Bowl(s) Available
- High Flow: 3/4" - 220 SCFM§
  1" - 240 SCFM§

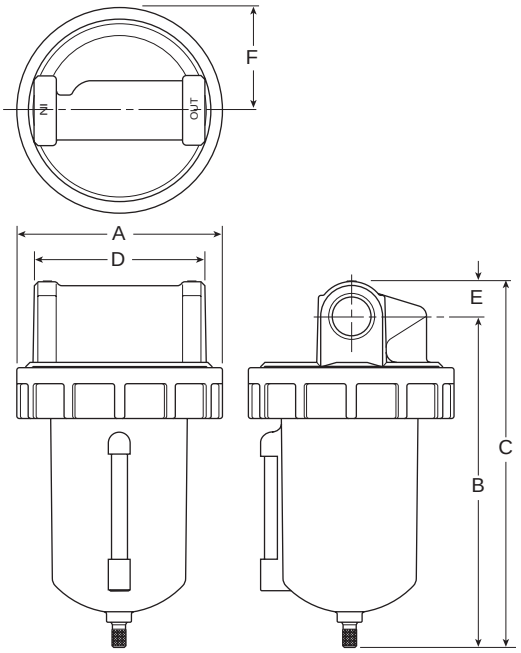

Port Size	NPT		BSPP	
	Manual Twist Drain	Internal Auto Drain	Manual Twist Drain	Internal Auto Drain
Metal Bowl / Sight Gauge				
3/4"	**F602-06WJ**	**F602-06WJR**	F602G06WJ	F602G06WJR
1"	**F602-08WJ**	**F602-08WJR**	F602G08WJ	F602G08WJR
Aluminum Bowl 32 oz. without Sight Gauge				
3/4"	**F602-06EJ**	**F602-06EJR**	F602G06EJ	F602G06EJR
1"	**F602-08EJ**	**F602-08EJR**	F602G08EJ	F602G08EJR

Bold Items are Most Popular.
For other models refer to ordering information below.

§ SCFM = Standard cubic feet per minute at 100 PSIG inlet, and 5 PSIG pressure drop with 40 micron element.

F602 Filter Dimensions					
A	**B**	**C**	**D**	**E**	**F**
F602-06W, F602-08W					
4.90 (124)	7.88 (200)	8.72 (221)	4.06 (103)	0.84 (21)	2.45 (62)
F602-06E, F602-08E					
4.90 (124)	11.10 (282)	11.94 (303)	4.06 (103)	0.84 (21)	2.45 (62)

inches
(mm)

Ordering Information

F	602	—	06	W	J		/**

Port Threads	Port Size	Bowl	Elements	Drains and Options	Engineering Change Designator
— NPT	**06 3/4 Inch**	E 32 oz. Large Capacity without Sight Gauge	G 5 Micron	**Blank Manual Twist Drain**	Will be entered at factory.
G BSPP	**08 1 Inch**	**W 16 oz. Metal with Sight Gauge**	**J 40 Micron**	Q External Heavy Duty Auto Drain	
				R Internal Auto Drain	
				U Semi-Auto Drain	

BOLD ITEMS ARE MOST POPULAR.

Technical Information

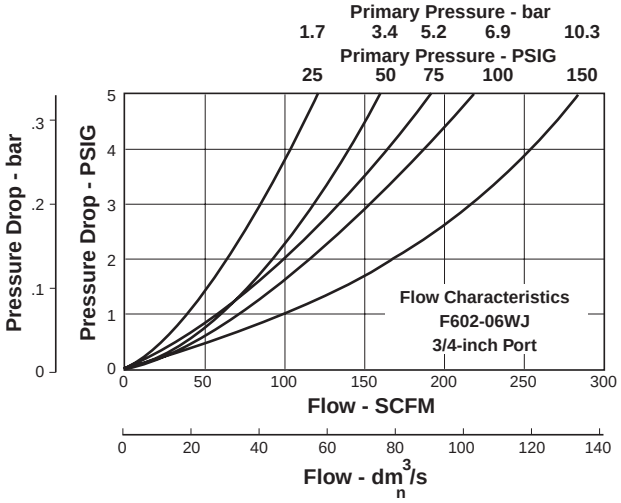

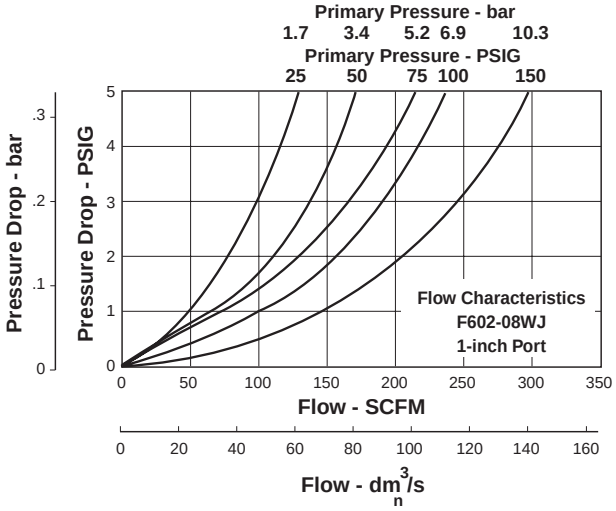

B

"Q" Option External Heavy Duty Auto Drain
SA602D / SA603D
For heavy duty applications where the filter is being used to remove large volumes of liquid and/or particulate matter from the airstream, the external automatic drain ("Q" option) should be used.

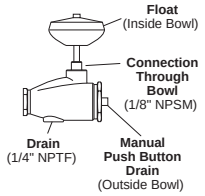

F602 Filter Kits & Accessories

Bowl Kits –
- Metal with Sight Gauge (W) BK605WB
- Aluminum (E) BK603B

Drain Kits –
- External Auto (W) SA602D
- External Auto (E) SA603D
- Internal Auto (All) SA602MD
- Manual (All) SA600Y7-1
- Semi-Automatic "Overnight" Drain SA602A7
  (Drains automatically under zero pressure)

Filter Element Kits –
- 40 Micron (All) EK602B
- 5 Micron (All) EK602VB

Mounting Bracket Kit
(Pair or 2 Kits of Pipe Mounted Brackets needed) –
- (3/4" Unit) SA200AW57
- (1" Unit) SA200CW57

Repair Kits –
- Deflector, Baffle Assembly, and Retaining Rod (E,W) RK602B
- External Auto Drain (All) RK602D
- Internal Auto Drain (All) RK602MD
- Metal Bowl with Sight Gauge (W) RKB605WB

Specifications

Bowl Capacity –
- Metal Bowl (W) ..... 16 Ounces
- Metal Bowl (E) ..... 32 Ounces

Port Threads ..... 3/4, 1 Inch

( ) = BOWL TYPE

Pressure & Temperature Ratings –
- Metal Bowl (W) ..... 0 to 250 PSIG (0 to 17.2 bar) 40°F to 150°F (4.4°C to 65.6°C)
- Aluminum Bowl (E) ..... 0 to 300 PSIG (0 to 20.4 bar) 40°F to 150°F (4.4°C to 65.6°C)
- With Internal Auto Drain (R) ..... 20 to 175 PSIG (1.4 to 11.9 bar) 40°F to 125°F (4.4°C to 52°C)
- With External Auto Drain (Q) ..... 0 to 250 PSIG (0 to 17.2 bar) 40°F to 150°F (4.4°C to 65.6°C)

Weight –
- Metal Bowl (W) ..... 6.3 lb. (2.86 kg) / Unit
- Metal Bowl (E) ..... 25 lb. (11.34 kg) / 4-Unit Master Pack
- Aluminum Bowl ..... 7 lb. (3.18 kg) / Unit 28 lb. (12.70 kg) / 4-Unit Master Pack

Materials of Construction

Body ..... Zinc

Bowls –
- Metal Bowl (W) ..... Zinc with Sight Gauge
- Metal Bowl (E) ..... Aluminum without Sight Gauge

Drain –
- Manual Twist & Overnight ..... Brass
- Housing "R" ..... Acetal
- Housing "Q" ..... Bronze

Filter Elements –
- 40 Micron (Standard) ..... Polypropylene
- 5 Micron (Optional) ..... Polypropylene

Seals ..... Nitrile

Sight Gauge ..... Nylon

Pneumatic Division
Richland, Michigan
www.wattsfluidair.com

F602 Standard Filters

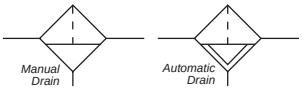



Features

- Excellent Water Removal Efficiency
- For Heavy Duty Applications with Minimum Pressure Drop Requirement
- Unique Deflector Plate that Creates Swirling of the Air Stream Ensuring Maximum Water and Dirt Separation
- Large Filter Element Surface Guarantees Low Pressure Drop and Increased Element Life
- 40 Micron Filter Element Standard, 5 Micron Available
- Metal Bowl with Sight Gauge Standard
- Twist Drain as Standard, Optional Auto Drain
- Large Bowl Capacity
- Optional High Capacity Bowl(s) Available
- High Flow: 1-1/4" - 390 SCFM§
  1-1/2" - 450 SCFM§

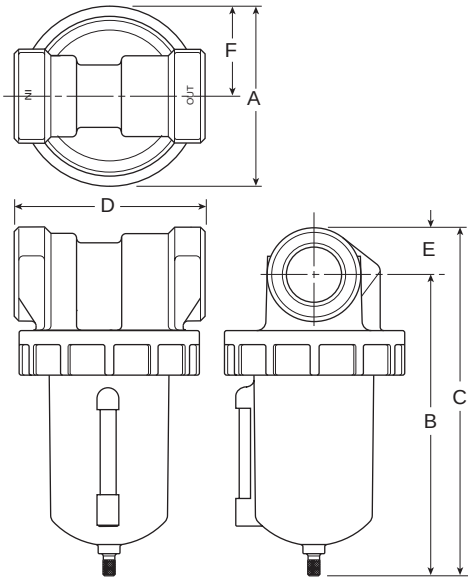

Port Size	NPT		BSPP	
	Manual Twist Drain	Internal Auto Drain	Manual Twist Drain	Internal Auto Drain
Metal Bowl / Sight Gauge				
1-1/4"	**F602-10WJ**	**F602-10WJR**	F602G10WJ	F602G10WJR
1-1/2"	**F602-12WJ**	**F602-12WJR**	F602G12WJ	F602G12WJR
Aluminum Bowl 32 oz. without Sight Gauge				
1-1/4"	**F602-10EJ**	**F602-10EJR**	F602G10EJ	F602G10EJR
1-1/2"	**F602-12EJ**	**F602-12EJR**	F602G12EJ	F602G12EJR

Bold Items are Most Popular.
For other models refer to ordering information below.

§ SCFM = Standard cubic feet per minute at 100 PSIG inlet, and 5 PSIG pressure drop with 40 micron element.

F602 Filter Dimensions					
A	B	C	D	E	F
F602-10W, F602-12W					
4.90 (124)	8.18 (208)	9.46 (240)	5.19 (132)	1.28 (32.4)	2.45 (62.2)
F602-10E, F602-12E					
4.90 (124)	11.41 (290)	12.69 (322)	5.19 (132)	1.28 (32.4)	2.45 (62.2)

inches
(mm)

Ordering Information

F	602	—	10	W	J		/**

Port Threads
— NPT
G BSPP

Port Size
10 1-1/4 Inch
12 1-1/2 Inch

Bowl
E 32 oz. Large Capacity without Sight Gauge
W 16 oz. Metal with Sight Gauge

Elements
G 5 Micron
J 40 Micron

Drains and Options
Blank Manual Twist Drain
Q External Heavy Duty Auto Drain
R Internal Auto Drain
U Semi-Auto Drain

Engineering Change Designator
Will be entered at factory.

BOLD ITEMS ARE MOST POPULAR.

Pneumatic Division
Richland, Michigan
www.wattsfluidair.com

Technical Information

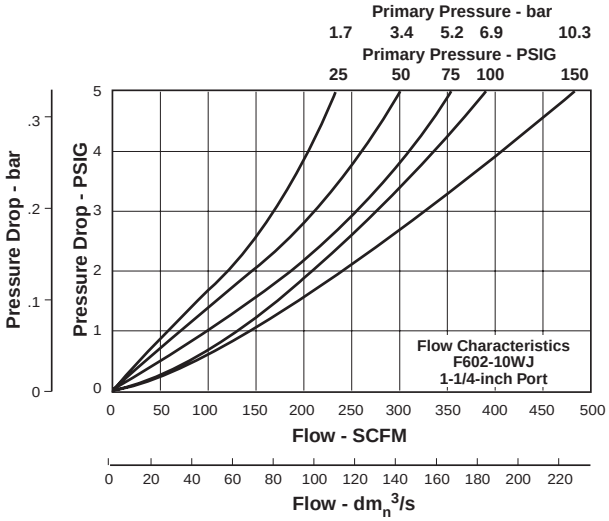

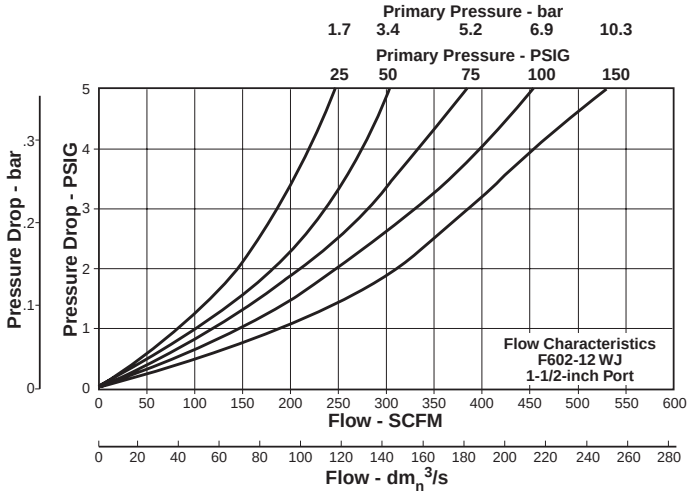

"Q" Option External Heavy Duty Auto Drain SA602D / SA603D

For heavy duty applications where the filter is being used to remove large volumes of liquid and/or particulate matter from the airstream, the external automatic drain ("Q" option) should be used.

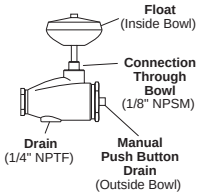

F602 Filter Kits & Accessories

Bowl Kits –
- Metal with Sight Gauge (W) BK605WB
- Aluminum (E) BK603B

Drain Kits –

External Auto (W) SA602D
External Auto (E) SA603D
- Internal Auto (All) SA602MD
- Manual (All) SA600Y7-1
- Semi-Automatic "Overnight" Drain SA602A7
  (Drains automatically under zero pressure)

Filter Element Kits –
- 40 Micron (All) EK602B
- 5 Micron (All) EK602VB

Repair Kits –
- Deflector, Baffle Assembly, and Retaining Rod (All) RK602C
- External Auto Drain (All) RK602D
- Internal Auto Drain (All) RK602MD
- Metal Bowl with Sight Gauge (W) RKB605WB

Specifications

Bowl Capacity –
- Metal (W) ..... 16 Ounces
- Aluminum (E) ..... 32 Ounces

Port Threads ..... 1-1/4, 1-1/2 Inch

( ) = BOWL TYPE

Pressure & Temperature Ratings –
- Metal Bowl (W) ..... 0 to 250 PSIG (0 to 17.2 bar)
  40°F to 150°F (4.4°C to 65.6°C)
- Aluminum Bowl (E) ..... 0 to 300 PSIG (0 to 20.4 bar)
  40°F to 150°F (4.4°C to 65.6°C)
- With Internal Auto Drain (R) ..... 20 to 175 PSIG (1.4 to 11.9 bar)
  40°F to 125°F (4.4°C to 52°C)
- With External Auto Drain (Q) ..... 0 to 250 PSIG (0 to 17.2 bar)
  40°F to 150°F (4.4°C to 65.6°C)

Weight –
- Metal Bowl (W) ..... 7 lb. (3.18 kg) / Unit
  28 lb. (12.70 kg) / 4-Unit Master Pack
- Aluminum Bowl (E) ..... 7.7 lb. (3.49 kg) / Unit
  31 lb. (14.06 kg) / 4-Unit Master Pack

Materials of Construction

Body ..... Zinc

Bowls –
- (W) ..... Metal (Zinc) with Sight Gauge
- (E) ..... Aluminum without Sight Gauge

Drain –
- Manual Twist & Overnight ..... Brass
- Housing "R" ..... Acetal
- Housing "Q" ..... Bronze

Filter Elements –
- 40 Micron (Standard) ..... Polypropylene
- 5 Micron (Optional) ..... Polypropylene

Seals ..... Nitrile

Sight Gauge ..... Nylon

F602 Standard Filters

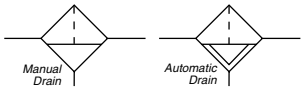



Features

- Excellent Water Removal Efficiency
- For Heavy Duty Applications with Minimum Pressure Drop Requirement
- Unique Deflector Plate that Creates Swirling of the Air Stream Ensuring Maximum Water and Dirt Separation
- Large Filter Element Surface Guarantees Low Pressure Drop and Increased Element Life
- 40 Micron Filter Element Standard, 5 Micron Available
- Metal Bowl with Sight Gauge Standard
- Twist Drain as Standard, Optional Auto Drain
- Large Bowl Capacity
- Optional High Capacity Bowl(s) Available
- High Flow: 2" & 2-1/2" - 1200 SCFM§

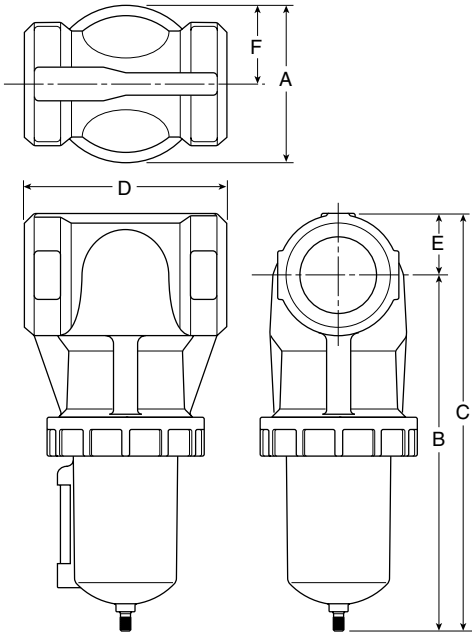

Port Size	NPT		BSPP	
	Manual Twist Drain	Internal Auto Drain	Manual Twist Drain	Internal Auto Drain
Metal Bowl / Sight Gauge				
2"	**F602-16WJ**	**F602-16WJR**	F602G16WJ	F602G16WJR
2-1/2"	**F602-20WJ**	**F602-20WJR**	F602G20WJ	F602G20WJR
Aluminum Bowl 32 oz. without Sight Gauge				
2"	**F602-16EJ**	**F602-16EJR**	F602G16EJ	F602G16EJR
2-1/2"	**F602-20EJ**	**F602-20EJR**	F602G20EJ	F602G20EJR

Bold Items are Most Popular.
For other models refer to ordering information below.

§ SCFM = Standard cubic feet per minute at 100 PSIG inlet, and 5 PSIG pressure drop with 40 micron element.

F602 Filter Dimensions					
A	B	C	D	E	F
F602-16W, F602-20W					
4.90 (124)	11.08 (281)	13.00 (330)	6.30 (160)	1.92 (48.7)	2.45 (62.2)
F602-16E, F602-20E					
4.90 (124)	14.31 (364)	16.23 (412)	6.30 (160)	1.92 (48.7)	2.45 (62.2)

inches (mm)

Ordering Information

F	602	—	16	W	J		/**

Port Threads	Port Size	Bowl	Elements	Drains and Options	Engineering Change Designator
— NPT	**16 2 Inch**	E 32 oz. Large Capacity without Sight Gauge	**J 40 Micron**	**Blank Manual Twist Drain**	Will be entered at factory.
G BSPP	**20 2-1/2 Inch**	**W 16 oz. Metal with Sight Gauge**		Q External Heavy Duty Auto Drain	
				R Internal Auto Drain	
				U Semi-Auto Drain	

BOLD ITEMS ARE MOST POPULAR.

Pneumatic Division
Richland, Michigan
www.wattsfluidair.com

Technical Information

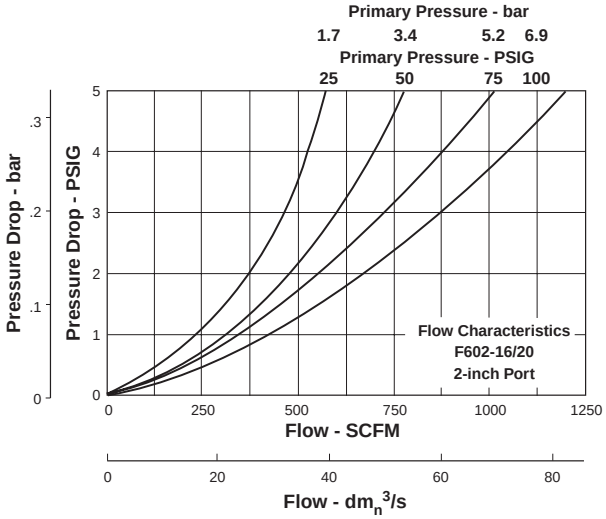

"Q" Option External Heavy Duty Auto Drain SA602D / SA603D
For heavy duty applications where the filter is being used to remove large volumes of liquid and/or particulate matter from the airstream, the external automatic drain ("Q" option) should be used.

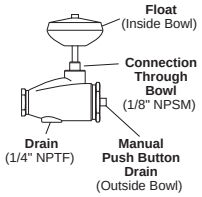

F602 Filter Kits & Accessories

Bowl Kits –
- Metal with Sight Gauge (W) BK605WB
- Aluminum (E) BK603B

Drain Kits –
- External Auto (W) SA602D
- External Auto (E) SA603D
- Internal Auto (All) SA602MD
- Manual (All) SA600Y7-1
- Semi-Automatic "Overnight" Drain SA602A7
  (Drains automatically under zero pressure)

4**Filter Element Kits –** ..... 40 Micron (All) EK602G

Repair Kits –
- Deflector, Baffle Assembly, and Retaining Rod (All) RK602G
- External Auto Drain (All) RK602D
- Internal Auto Drain (All) RK602MD
- Metal Bowl with Sight Gauge (W) RKB605WB

Specifications

Bowl Capacity –
- Metal (W) ..... 16 Ounces
- Aluminum (E) ..... 32 Ounces

Port Threads ..... 2, 2-1/2 Inch

( ) = BOWL TYPE

Pressure & Temperature Ratings –
- Metal Bowl (W) ..... 0 to 250 PSIG (0 to 17.2 bar)
  40°F to 150°F (4.4°C to 65.6°C)
- Aluminum Bowl (E) ..... 0 to 300 PSIG (0 to 20.4 bar)
  40°F to 150°F (4.4°C to 65.6°C)
- With Internal Auto Drain (R) ..... 20 to 175 PSIG (1.4 to 11.9 bar)
  40°F to 125°F (4.4°C to 52°C)
- With External Auto Drain (Q) ..... 0 to 250 PSIG (0 to 17.2 bar)
  40°F to 150°F (4.4°C to 65.6°C)

Weight –
- Metal Bowl (W) ..... 9.8 lb. (4.45 kg) / Unit
  39 lb. (17.69 kg) / 4-Unit Master Pack
- Aluminum Bowl (E) ..... 10.3 lb. (4.67 kg) / Unit
  11 lb. (4.99 kg) / 1-Unit Master Pack

Materials of Construction

Body ..... Aluminum

Bowls –
- (W) ..... Metal (Zinc) with Sight Gauge
- (E) ..... Aluminum without Sight Gauge

Drain –
- Manual Twist & Overnight ..... Brass
- Housing "R" ..... Acetal
- Housing "Q" ..... Bronze

Filter Elements –
- 40 Micron (Standard) ..... Polypropylene

Seals ..... Buna N

Sight Gauge ..... Nylon

Pneumatic Division
Richland, Michigan
www.wattsfluidair.com

F701 Coalescing Filters



Features

- Removes Liquid Aerosols and Sub-micron Particles
- Protects Pneumatic Systems from Contamination that Standard Particulate Filters Will Not Catch
- Two Different Grade Elements Available
- Differential Pressure Pop-up Indicator Standard
- Differential Pressure Gauge Optional
- High Flow Design

Note:
All coalescing filters should be protected by a particulate filter (i.e., F602, or other) installed upstream.

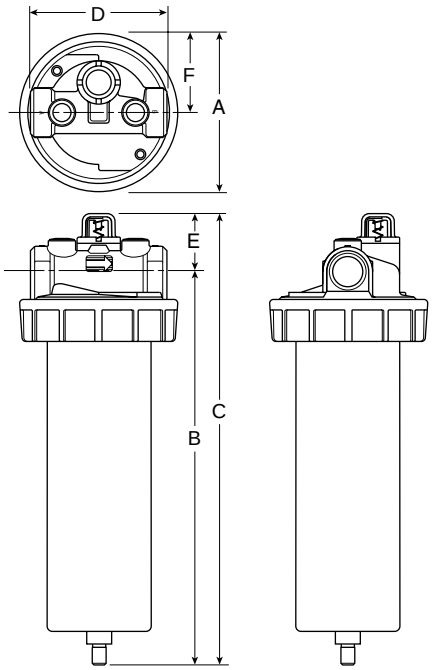

Port Size	Grade 6		Grade 10	
	Flow (SCFM)*	Part Number	Flow (SCFM)*	Part Number
1/4"	22	**F701-02W3P**	36	**F701-02W7P**
3/8"	22	**F701-03W3P**	36	**F701-03W7P**
1/2"	22	**F701-04W3P**	36	**F701-04W7P**
1/4"	53	**F701-02E3P**	88	**F701-02E7P**
3/8"	53	**F701-03E3P**	88	**F701-03E7P**
1/2"	53	**F701-04E3P**	88	**F701-04E7P**
3/4"	95	**F701-06E3P**	158	**F701-06E7P**
3/4"	170	**F701-06L3P**	285	**F701-06L7P**
1"	95	**F701-08E3P**	158	**F701-08E7P**
1"	170	**F701-08L3P**	285	**F701-08L7P**

* Dry media flow. For wet media info see table to right.

F701 Coalescing Filter Dimensions

Port Size	Bowl Capacity	A	B	C	D	E
1/4, 3/8, 1/2 Inch (W)	8 oz.	3.76 (96)	6.12 (155)	7.09 (180)	3.25 (83)	.97 (25)
1/4, 3/8, 1/2 Inch (E)	16 oz.	3.76 (96)	9.37 (238)	10.34 (262)	3.25 (83)	.97 (25)
3/4, 1 Inch (E)	32 oz.	4.95 (126)	11.77 (299)	13.00 (330)	4.00 (101)	1.23 (31)
3/4, 1 Inch (L)	100 oz.	4.95 (126)	21.39 (543)	22.63 (575)	4.00 (101)	1.23 (31)

"G" Differential Pressure Gauge add 2.00(50.8) to C & E.
"Q" External Auto Drain add 1.70 (43.1) to B & C.

inches
(mm)

Ordering Information

F	701	—	04	W	3	P	T	/**

Port Threads
- **— NPT**
- G BSPP

Port Size
- 02 1/4 Inch
- 03 3/8 Inch
- 04 1/2 Inch
- 06 3/4 Inch
- 08 1 Inch

Bowl
- E Metal without Sight Gauge
- **W† Metal with Sight Gauge**
- L* High Capacity Metal Bowl without Sight Gauge

Elements
- **3 Grade 6**
- **7 Grade 10**

Element Service Indicator
- **Blank None**
- P Pop-up Style
- G Differential Pressure Gauge

Bowl Drains
- **Blank Manual Twist Drain**
- Q* External Auto Drain
- T Internal Automatic Drain
- U Semi-Auto Drain

Engineering Change Designator
Will be entered at factory.

* 3/4 & 1" Only
† 1/4 & 1/2 Only

* "Q" Option Not Available with Bowl Option "L"

BOLD ITEMS ARE MOST POPULAR.

Pneumatic Division
Richland, Michigan
www.wattsfluidair.com

Element Selection

Element Grade	Applications
6	General air coalescing applications when total removal of liquid aerosols and suspended fines is required in all pressure ranges. Protection of air dryers, air gauging, air logic, modulating systems, critical air conveying, most breathing air systems, etc.
10	Precoalescer or prefilter for Grade 6 to remove gross amounts of water and oil, or tenacious aerosols which are difficult to remove. Upgrading existing particulate equipment to coalescing without increase in pressure drop.

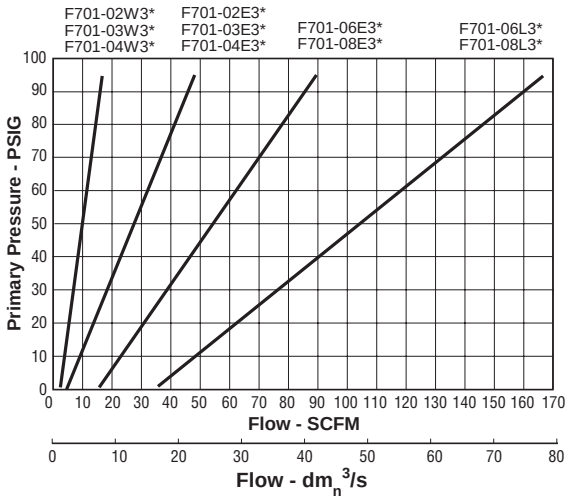

Element Specifications

Grade	D.O.P. Coalescing Efficiency 0.3 to 0.6 Micron Particles	Maximum Oil Carryover[1] PPM w/w	Pressure Drop (PSID)[2] @ Rated Flow		Particulate Micron Rating
			Media Dry	Media Wet with 10-20 wt. Oil	
6	99.97%	0.008	1.0	2-3	0.01
10	95%	0.85	0.5	0.5	0.7

[1] Tested per BCAS 860900 at 40 ppm inlet.
[2] Add dry + wet for total pressure drop.

F701 Filter Kits & Accessories

Mounting Bracket –
Port Size
1/4, 3/8, 1/2 (Mounts to Filter Head)..... SAF602-0572
3/4 (Pair of Pipe Mounted Brackets)..... SA200AW57
1 (Pair of Pipe Mounted Brackets)..... SA200CW57

Bowl Kit –
Port Size
1/4, 3/8, 1/2 Inch (W)..... BK605WA
1/4, 3/8, 1/2 Inch (E)..... BK603A
3/4, 1 Inch (E)..... BK603B
3/4, 1 Inch (L)..... BK603C

Differential Pressure Pop Up Indicator Repair Kit RK701P
(only works with originally equipped units)

Differential Pressure Gauge DP276-P
(only works on units without pop-up indicator)

Drain Kits –
Internal Automatic Drain - High Pressure (T) SA702MD
Manual Twist Drain SA600Y7-1
Semi-Automatic "Overnight" Drain..... SA602A7
(Drains automatically under zero pressure)

Filter Element Kits –
Port Size ..... Grade 6
1/4, 3/8, 1/2 Inch (W)..... F701-C3-0771
1/4, 3/8, 1/2 Inch (E)..... F701-C3-0772
3/4, 1 Inch (E)..... F701-C3-0773
3/4, 1 Inch (L)..... F701-C3-0774

Port Size ..... Grade 10
1/4, 3/8, 1/2 Inch (W)..... F701-C7-0771
1/4, 3/8, 1/2 Inch (E)..... F701-C7-0772
3/4, 1 Inch (E)..... F701-C7-0773
3/4, 1 Inch (L)..... F701-C7-0774

Specifications

Operation –
Maximum Recommended Pressure Drop ..... 10 PSIG
(element should be replaced)
Normal Operating Pressure Drop (Dry)..... 2 PSIG
Normal Operating Pressure Drop (Wet) ..... 5 PSIG

Minimum Recommended Flow – ..... 20% of Rated Flow

Maximum Pressure (With Manual Drains) –
1/4, 3/8, 1/2 Inch (W)..... 0 to 250 PSIG (0-17 bar)
1/4, 3/8, 1/2 Inch (E)..... 0 to 300 PSIG (0-20 bar)
3/4 Inch (E)..... 0 to 300 PSIG (0-20 bar)
1 Inch (L) ..... 0 to 300 PSIG (0-20 bar)

Maximum Pressure (With Automatic Drains) –
"R" Drain ..... 175 PSIG (12 bar)
"T" Drain ..... 250 PSIG (17 bar)
"Q" Drain..... 250 PSIG (17 bar)

Maximum Temperature – .....32°F to 150°F (0°C to 65°C)
Maximum temperature with "T", "R", or "Q" Drains .... 125°F (52°C)

Weight –
1/4, 3/8, 1/2 Inch (W 8 oz.) ..... 2.5 lb.
1/4, 3/8, 1/2 Inch (E 16 oz.) ..... 2.5 lb.
3/4 Inch (E 32 oz.) ..... 5 lb.
1 Inch (L 100 oz.)..... 8 lb.

Materials of Construction

Body & Flange Ring .....Zinc

Bowl –
Metal Bowl (W) ..... Zinc with Nylon Sight Gauge
Metal Bowl (E) (L).....Aluminum

Drains –
Automatic Float Drain
Housing "R", "T"..... Acetal
Housing "Q" ..... Bronze
Manual Twist Drain ..... Brass

Seals & Float ..... Buna N

Springs .....Stainless Steel

Elements (Media) .....Borosilicate Fibers & Felt

Element End Caps .....Urethane

Seals ..... Buna N

( ) = BOWL TYPE

30F, 31F, 32F Coalescing Filters – Main Line



Features

- Removes Liquid Aerosols and Sub-micron Particles
- Liquids Gravitate to the Bottom of the Element and Will Not Re-enter the Airstream
- Oil Free Air For Critical Applications, such as Air Gauging and Pneumatic Instrumentation and Controls
- Differential Pressure Indicator Standard
- High Flow:

Port Size	Model	Sump Capacity	SCFM§
1-1/2"	30F	14.8 Oz.	350
2"	31F83	17.9 Oz.	450
2"	31F8L	20.9 Oz.	625
2-1/2"	32F9	29.7 Oz.	800
3"	32FN	29.7 Oz.	1000

§ SCFM = Standard cubic feet per minute at 90 PSIG inlet and 5 PSIG pressure drop.

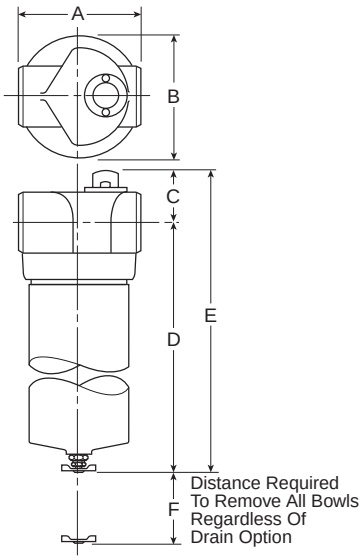

Port Size	Twist Drain
Metal Bowl without Sight Gauge	
1-1/2"	**30F73ECP**
2"	**31F83ECP**
2"	**31F8LECP**
2-1/2"	**32F9LECP**
3"	**32FNLECP**

Most common part numbers shown bold, with Grade 6 Elements (for Grade 10 Elements, replace "E" with "H" in the 6th position). For other models refer to ordering information below.

Main Line – Coalescing Filter Dimensions

	A	B	C	D	E	F
30F73	6.00 (152)	5.67 (144)	2.55 (65)	17.97 (456)	20.52 (521)	13.50 (343)
30F77	6.00 (152)	5.67 (144)	2.55 (65)	17.76 (451)	20.32 (516)	13.50 (343)
31F83	6.00 (152)	5.67 (144)	2.55 (65)	23.60 (599)	26.15 (664)	19.25 (489)
31F8L	6.00 (152)	5.67 (144)	2.55 (65)	28.60 (726)	31.15 (791)	24.02 (610)
31F87	6.00 (152)	5.67 (144)	2.55 (65)	23.40 (594)	25.95 (659)	19.25 (489)
31F8M	6.00 (152)	5.67 (144)	2.55 (65)	28.39 (721)	30.06 (763)	24.02 (610)
32F9L	8.00 (203)	7.60 (193)	3.31 (84)	34.64 (880)	37.94 (964)	28.50 (724)
32F9M	8.00 (203)	7.60 (193)	3.31 (84)	34.40 (875)	37.74 (959)	28.50 (724)
32FNL	8.00 (203)	7.60 (193)	3.31 (84)	34.64 (880)	37.94 (964)	28.50 (724)
32FNM	8.00 (203)	7.60 (193)	3.31 (84)	34.40 (875)	37.74 (959)	28.50 (724)

Inches (mm)

Ordering Information

30F	7	3	E	C	P

Port Size
30F
7 1-1/2 Inch
31F
8 2 Inch
32F
9 2-1/2 Inch
N 3 Inch

Bowl Options
Twist Drain
3. Short Bowl (30F, 31F)
L. Long Bowl (31F, 32F)
Metal Bowl with Automatic Float Drain
7. Short Bowl (30F, 31F)
M. Long Bowl (31F, 32F)

Elements
E. Grade 6
H. Grade 10

Engineering Level
C Current

Options
P. Pressure Differential Indicator

BOLD ITEMS ARE MOST POPULAR.

Pneumatic Division
Richland, Michigan
www.wattsfluidair.com

Technical Information

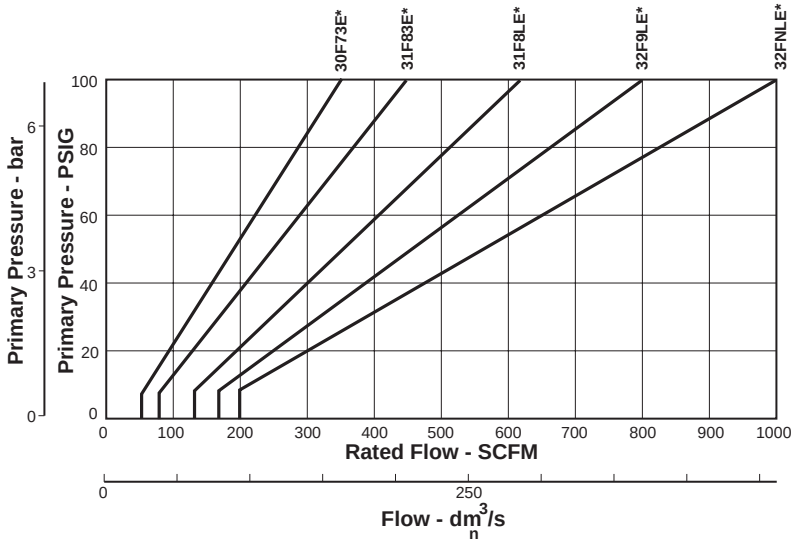

30F, 31F, 32F Coalescing Filter Kits & Accessories

Bowl Kit –
Metal / Twist Drain –
30F 41618P
31F83 ..... 41619P

DPI Replacement Kit –
30F, 31F83, 31F8L, 32F 2003P

Differential Pressure Indicating Gauge –
30F, 31F83, 31F8L, 32F 2111P

Drain Kits –
Automatic Float Drain –
30F, 31F83, 31F8L, 32F PS506P

Filter Element Kits –
Grade 6 (Standard) –
30F 9920-011x1P
31F83 ..... 9920-012x1P
31F8L 9920-013x1P
32F 9920-014x1P

Grade 10 (Optional) –
30F 9920-015x1P
31F83 ..... 9920-016x1P
31F8L 9920-017x1P
32F 9920-018x1P

Specifications

Model	Sump Capacity	Port Threads	Weight
30F	14.8 Oz.	1-1/2"	11.9 lb. (5.4 kg)
31F83	17.9 Oz.	2"	14.0 lb. (6.4 kg)
31F8L	20.9 Oz.	2"	15.9 lb. (7.2 kg)
32F9	29.7 Oz.	2-1/2"	35.0 lb. (15.9 kg)
32FN	29.7 Oz.	3"	34.2 lb. (15.5 kg)

Operation –
Normal Operating Pressure Drop ..... 2 PSIG
Maximum Recommended Pressure Drop ..... 10 PSIG
(Element should be replaced)
Minimum Recommended Flow 20%

Pressure & Temperature Ratings – ... 0 to 250 PSIG (0 to 17.2 bar)
32°F to 175°F (0°C to 80°C)

Materials of Construction

Body ..... Aluminum

Bowl ..... Aluminum without Sight Gauge

Drains –
Twist Drain ..... Brass Petcock
Automatic Float Drain –
Housing, Float ..... Plastic
Seals ..... Buna N
Springs, Push Rod ..... Stainless Steel

Filter Element –
Borosilicate & felt glass fibers 99.97% DOP efficiency
Largest Aerosol Particle Passed (Grade 6) ..... 0.75 Microns
Largest Solid Particle Passed (Grade 6) ..... 0.30 Microns

Seals ..... Nitrile

Pneumatic Division
Richland, Michigan
www.wattsfluidair.com

DD Desiccant Dryers

B



Features

- These Desiccant Dryers are a Convenient and Cost Effective Means of Ensuring Your Sensitive Pneumatic Applications are Never Exposed to Damaging Moisture
- Compact Size for Point-of-Use Applications
- Drying Efficiency Down to -40°F Pressure Dew Point
- Easily and Quickly Serviced
- Sightglass in Bowl to Monitor Desiccant
- Built-in Particulate after Filter Prevents Downstream Dust
- No Electricity Needed
- Low Pressure Drop
- No Purge Air Lost as with Other Dryer Types

Applications

- Paint Spraying
- Instrument Air
- Laboratory Instruments
- Control Air Systems
- Air Blanketing

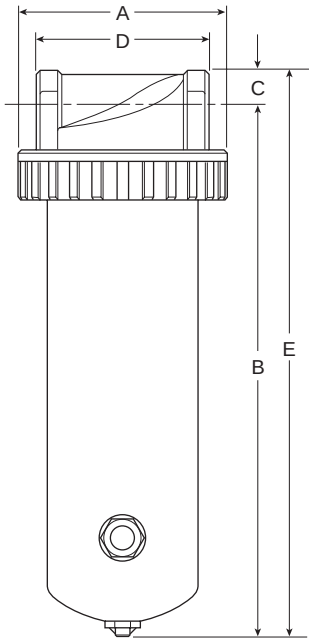

DD Desiccant Dryer Dimensions				
A	**B**	**C**	**D***	**E**
DD15				
4.94 (125)	12.69 (322)	.84 (21)	4.06 (103)	13.5 (343)
DD30				
4.94 (125)	22.44 (570)	.84 (21)	4.06 (103)	23.25 (591)
DD60				
4.94 (125)	29.44 (748)	.84 (21)	4.06 (103)	30.25 (768)

* Dimension does not include reducer bushings for 1/4", 3/8", 1/2" versions.

inches
(mm)

Performance

The rated flow capacities are nominal ratings provided for reference. These capacities are recommended for minimal pressure drop and average desiccant life. A supply of low flow / low humidity air will provide longer desiccant life: whereas, high flow / high humidity air will require more frequent desiccant changes. Installed in an application with intermittent flow, these desiccant dryers will typically dry air for weeks before the silica gel desiccant requires replacement or regeneration.

Ordering Information

Port Size	15 SCFM	30 SCFM	60 SCFM
Desiccant Capacity[1]	2.5 lb[1]	5 lb.[1]	10 lb.[1]
1/4" [2]	**DD15-02**	N/A	N/A
3/8" [2]	**DD15-03**	N/A	N/A
1/2" [2]	**DD15-04**	**DD30-04**	**DD60-04**
3/4"	**DD15-06**	**DD30-06**	**DD60-06**
1"	N/A	**DD30-08**	**DD60-08**

Notes:
1. Desiccant must be ordered separately
2.These units supplied with reducer bushings

As the wet compressed air enters through the inlet, the air travels down through the bed of desiccant which adsorb the water vapor and aerosols. The silica gel desiccant beads will reduce the humidity down to a -40°F pressure dew point. After the moisture has been removed, the dry air passes through a sintered bronze filter element (eliminating dust downstream), up the tube and out the outlet port.
As the desiccant becomes saturated with moisture, the dew point will begin to rise. This is evident when the blue silica gel desiccant beads in the sight gauge change to pink, indicating the need for desiccant replacement. Simply remove the flange and bowl and replace with new desiccant or regenerate saturated desiccant by heating to 275°F.

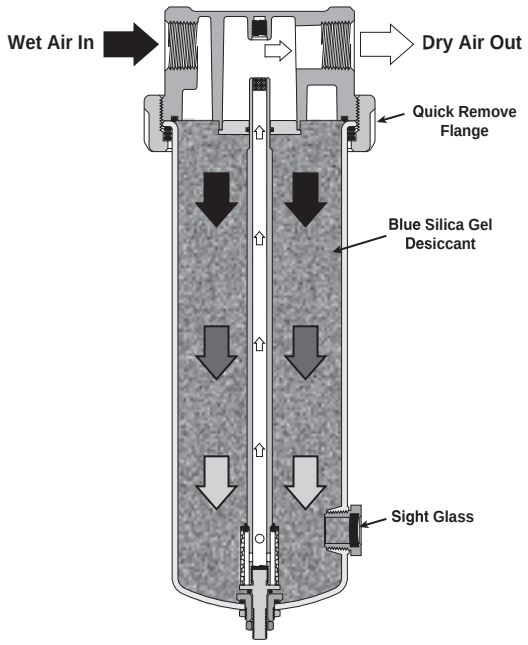

Installation Tips

- Always place a moisture separator/particulate filter (i.e., F602) to remove bulk moisture **and** a coalescing filter (i.e., F701) to remove oil upstream of desiccant dryer. Desiccant coated with oil will not adsorb oil.
- Automatic drains should be used in prefilters
- A spring ball check valve should be installed at the dryer inlet to maximize the life of the desiccant.

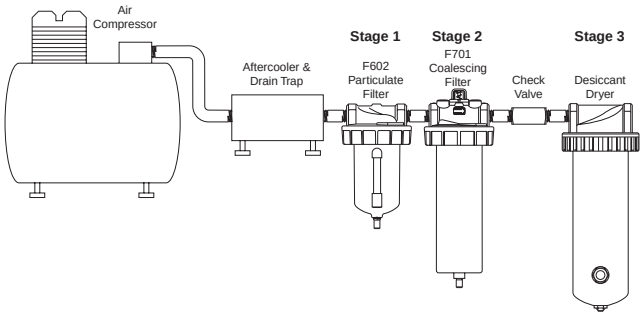

Air Preparation Stages

Stage	Type of Filter	Example	Function Served in Compressed Air System
1	Particulate / Moisture Removal Filters	F602	Removes bulk moisture & particulate matter [1]
2	Coalescing Filters	F701, 30F, 31F	Removes fine particulate matter, moisture droplets and aerosols, but NOT vapor[2]
3	Desiccant Dryer	DD15, DD30, DD60	Removes moisture vapor[3]

Notes:
1. Removes approx 75% of moisture.
2. Removes approx 99.97% efficient in removing oil & water aerosols >.01 micron.
3. Provides pressure dew point of -40° F with unsaturated desiccant.

Desiccant Dryers Kits & Accessories

Desiccant - Silica Gel 100% Indicating –
(6) .88 lb. Bags SGM100-1
(24) .88 lb. Bags SGM100-4

Flow Tube Repair Kit (Tube, Filter Element(s), Adaptor)
DD15 ..... RKDD15-02-06
DD30 ..... RKDD30-03-08
DD60 ..... RKDD60-03-08

Mounting Brackets (Recommended for DD15 & DD30 only) –
1/4 Inch Pipe Size (Pair of Pipe Mounted Brackets).... SA200YW57
1 Inch Pipe Size (Pair of Pipe Mounted Brackets)..... SA200CW57

Spring Check Valve for Inlet (250 PSIG max.) –
(Maximizes Life of Desiccant)
1/4 Inch NPT..... 003393001
3/8 Inch NPT..... 003393002
1/2 Inch NPT..... 003393003
3/4 Inch NPT..... 003393004

Specifications

Desiccant Capacity (Desiccant must be ordered separately) –
DD15 ..... 2.5 lb.
DD30 ..... 5 lb.
DD60 ..... 10 lb.

Filter Element Rating –
DD15, DD30 ..... 90 micron
DD60 ..... 40 micron

Pressure & Temperature Ratings –
Optimum working temperature ..... Below 100° F
Pressure Range..... 0 to 300 PSIG
Temperature Range..... 32°F to 180°F

Weight (Housing Only) –
DD15 (add 2.5 lb for weight full) ..... 8 lb.
DD30 (add 5 lb for weight full) ..... 13 lb.
DD60 (add 10 lb for weight full) ..... 20 lb.

Materials of Construction

Bowl –
DD15, DD30 ..... Aluminum
DD60 ..... Steel

Flow Tube ..... CPVC

Filter Elements ..... Sintered Bronze

Head & Flange Ring ..... Zinc

Other Hardware ..... Brass

Seals ..... Buna-N

Sight Glass ..... Glass & Steel

Pneumatic Division
Richland, Michigan
www.wattsfluidair.com

Regulators

Regulation

An air regulator is a specialized control valve. It reduces upstream supply pressure level to a specified constant downstream pressure.

Pneumatic equipment that is operated at higher-than-recommended pressure wastes the energy to generate that pressure. It creates a potential safety hazard, and probably will wear out prematurely. Operating below specified pressure can cause the machine to fail to meet design performance specifications. Therefore, precise air pressure control is essential to efficient operation of air-powered equipment.

How to Select the Proper Regulator

While regulator bodies are generally constructed of die-cast metal, other external parts may be either metal or plastic. Remember that all-metal construction is best for tough applications, where abuse is likely to occur, but plastic construction is generally lower in cost. For normal industrial applications, either construction is suitable.

Inlet pressure rating and downstream controlled range, as well as flow capacity, must be determined before selecting a regulator. Port size should match piping size.

Required response time, relieving capability, and type of adjustment are other considerations. Highly sensitive, lightweight diaphragm sensors vs. the slower, but often more durable, piston sensors. Self-relieving vs. non-relieving regulators. T-Handles or knobs as the adjustment mechanism, or air pilot operated regulator which offer remote adjustment. Other choices to be made include gauge, panel mount and other special options.

Regulator Construction

Regulators are generally constructed using a die-cast metal body. Other external parts, such as the spring cage and bottom plug, may be either metal or plastic. All-metal construction offers more durability in tough applications where abuse is likely to occur, while the plastic construction offers lower cost. For normal industrial applications (temperature range of 40° to 120° F and supply pressure to 300 PSIG), either construction will serve well.

Lightweight diaphragm sensors offer quick response and high sensitivity to air pressure changes. Piston sensors are somewhat slower but may be more durable. Where downstream pressure requirements change rapidly enough to cause regular chatter, slower response may be an advantage.

If the self-relieving feature is not needed for an application, simpler non-relieving regulators are available.

For regulators with an adjustment spring, a -Tee Handle or knob provides the external link to the spring on various models.

Pilot-operated regulators substitute air pressure in the chamber above the sensor to provide the reference force. Remote adjustment through a separate pilot regulator thus becomes possible, or the pilot signal can be fed back from a downstream location for precise control.

The balanced inner valve design exposes both sides of the inner valve to essentially the same pressure. This eliminates much of the effect that changes in inlet pressure might have on inner valve position and orifice opening.

Regulator Operation

In a typical regulator, an inner valve sets the size of an orifice which connects inlet port to outlet port. The sensing element, often a diaphragm or piston mechanically linked to the inner valve, reacts to downstream pressure and a reference force to position the inner valve. The reference force can be a spring, or an air pilot chamber.

The valve is normally open. High pressure air enters and flows through the orifice toward the outlet. Downstream pressure is connected through an aspirator tube to the bottom of the diaphragm. As downstream pressure increases, the diaphragm is forced upward, compressing the adjustment spring. When the diaphragm moves, the inner valve spring pushes the inner valve disc upward to throttle the orifice. If downstream pressure exhausts, the mechanical sequence reverses and the inner valve disc opens the orifice until the set pressure is reached again.

The arrangement of separate diaphragm chamber and aspirator tube accomplishes two purposes. First, the diaphragm is moved out of the potentially abrasive air stream. Second, and more important, if the downstream system calls for high flow, this flow generates a low pressure venturi effect at the end of the aspirator tube and into the diaphragm chamber. The diaphragm therefore reacts more quickly to open the orifice via the inner valve, thereby improving response time to high flow demands.

Some circuits may be subject to downstream-generated high pressure (from high temperatures or heavy vertical loads on cylinders, for example). This high pressure is reduced by a self-relieving feature built into the regulator. The inner valve stem normally blocks a relieving orifice in the center of the diaphragm. If excessive pressure lifts the diaphragm off the stem, air bleeds through the orifice and out the spring cage vent until the system returns to the set pressure.

Regulators

Regulator Comparison Chart

		Standard Regulator	Precision Regulator	High Precision Regulators		
	Examples —>	**R10, R11, R119**	**R216**	**R210**	**R220**	**R230**
Repeatability / Sensitivity	Regulator's ability to return to a set pressure after inducing flow.	2 to 4 PSIG	0.5 to 1.0 PSIG	0.005 PSIG 1/8" Water Column	0.005 PSIG 1/8" Water Column	0.010 PSIG 1/4" Water Column
Reduced Pressure Variation	This refers to the regulator's ability to maintain a consistent output pressure when faced with variables such as time, cycling, temperature, supply pressure, flow, etc.	Average	Good	Best	Best	Better
Input Pressure	Unregulated air pressure going into the regulator	Varies	Varies	150 PSIG Max.	150 PSIG Max.	250 PSIG Max.
Effect of Supply Pressure Variation on Regulated Pressure	Reduced / set pressure variation when input pressure changes by 100 PSIG	Approx. 3 - 6 PSIG	4 PSIG	0.020 PSIG	0.020 PSIG	0.100 PSIG
Reduced Pressure Range	Reduced pressure ranges available	Varies	Varies	2-40 PSIG 2-120 PSIG	2-120 PSIG	0-2 PSIG 0-30 PSIG 0-60 PSIG 0-150 PSIG
Flow Capacity	Regulator's flow capacity	Varies	Varies	14 SCFM	14 SCFM	80 SCFM
Exhaust (Relief) Capacity	Regulator's exhaust/relief flow rating when backpressure is introduced from downstream	Low	Low	3 SCFM	11 SCFM	4 SCFM
Overpressure to Relieve ***Key in cylinder applications***	Regulator's sensitivity to relieve excess downstream pressure over the set pressure.	Average (5-10 PSIG)	Good (1 PSIG)	Best (0.005 PSIG)	Best (0.005 PSIG)	Better (0.010 PSIG)
Constant Bleed	Does the regulator constantly bleed air to the atmosphere to maintain accuracy?	No	Varies	Yes	Yes	Yes
Size Constraints	Overall size of regulator	Varies	Varies	4.5" H x 2.06" W	4.5" H x 2.06" W	5.5" H x 3" W
Mounting Constraints	Mounting options or Bracket	Varies	Panel, Pipe,	Panel, Pipe, or Bracket	Panel, Pipe, or Bracket	Panel, Pipe, Bracket, or Modular
Port Size	Inlet / Outlet port size	Varies	Varies	1/4"	1/4"	1/4" or 3/8"

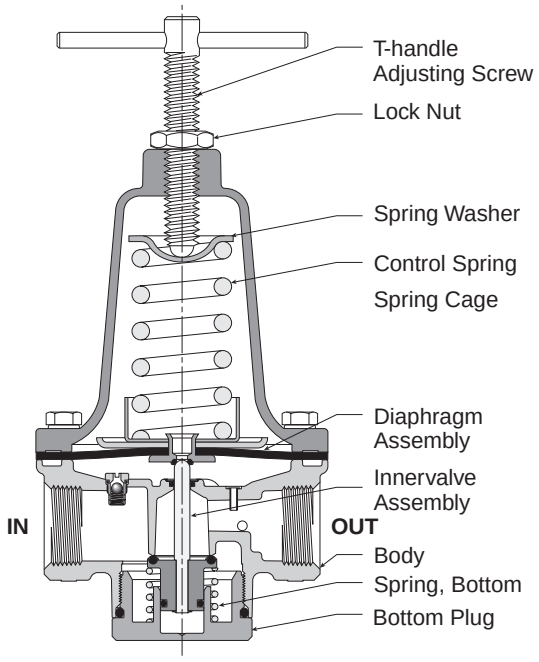

Standard Regulator

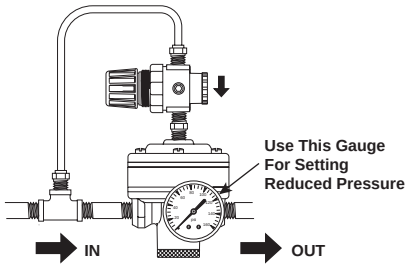

Pilot Regulator Application

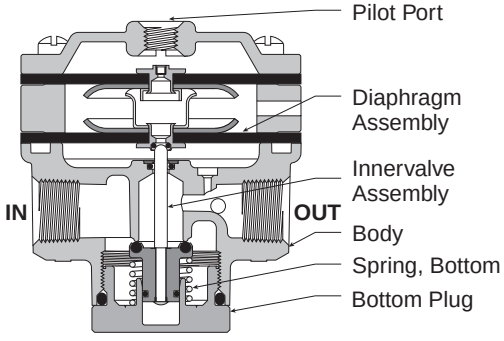

Pilot Operated Regulator

R10 / R11 General Purpose Regulators

B



Features

- High Flow Performance Featuring Rugged Design for the Most Demanding Applications
- Diaphragm Operated Design with Balanced Poppet Design for Quick and Accurate Regulation
- Accurate Pressure Regulation
- Panel Mountable
- High Flow: 1/4" - 80 SCFM§
  3/8" - 80 SCFM§
  1/2" - 100 SCFM§
- **R10:** Push-to-Lock, Pull-to-Adjust. Adjusting Lock is engaged when Knob is Removed Rendering Unit Tamper Resistant
- **R11:** Heavy Duty Tee Handle Adjustment

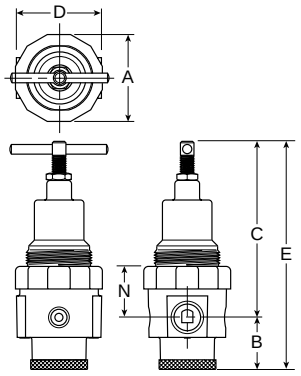

R11

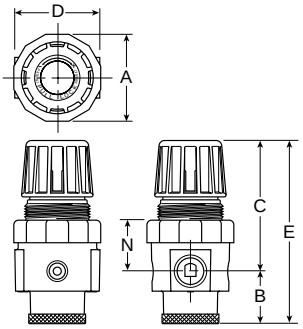

R10

Port Size	R10 NPT	R11 NPT
	Relieving	**Relieving**
Without Gauge 0-125 PSIG Reduced Pressure		
1/4"	**R10-02C**	**R11-02C**
3/8"	**R10-03C**	**R11-03C**
1/2"	**R10-04C**	**R11-04C**
With Gauge 0-125 PSIG Reduced Pressure		
1/4"	**R10-02CG**	**R11-02CG**
3/8"	**R10-03CG**	**R11-03CG**
1/2"	**R10-04CG**	**R11-04CG**

Bold items are most popular.
For other models refer to ordering information below.

§ SCFM = Standard cubic feet per minute at 100 PSIG inlet, 75 PSIG no flow secondary setting, and 20 PSIG pressure drop.

R10 Regulator Dimensions					
A	**B**	**C**	**D**	**E**	**N**
R10					
2.25 (57)	1.40 (36)	3.38 (86)	2.33 (59)	4.78 (121)	1.38 (35)
R11					
2.25 (57)	1.40 (36)	4.72 (120)	2.33 (59)	6.13 (156)	1.38 (35)

inches
(mm)

NOTE: 1.75 Dia. (44mm) hole required for panel mounting.

Ordering Information

R	10	—	02	C		/**

Series	Port Threads	Port Size	Reduced Pressure Range	Options	Engineering Change Designator
10 Tamper Resistant, Snap Lock, Removable Knob	**— NPT**	**02 1/4 Inch**	A 0-25 PSIG	G Gauge	Will be entered at factory.
11 Tee Handle Adjustment	G BSPP	**03 3/8 Inch**	B 0-60 PSIG	K Non-Relieving	
		04 1/2 Inch	**C 0-125 PSIG**	P Panel Mount Nut	
			D 0-250 PSIG	X64** Fluorocarbon O-Rings and Diaphragm	
				N Panel Mount Threads at Top of Bonnet (R11 Only)	
				X81** Brass Body	
				X8** Low Temp. Version	
				X7* Brass Bottom Plug	

***NOTE:** Beginning January 2008, Brass Bottom Plug is Optional - Nylon is Standard.

** Brass Bottom Plug Standard with X64, X81, and X8 Options.

BOLD ITEMS ARE MOST POPULAR.

Pneumatic Division
Richland, Michigan
www.wattsfluidair.com

Technical Information

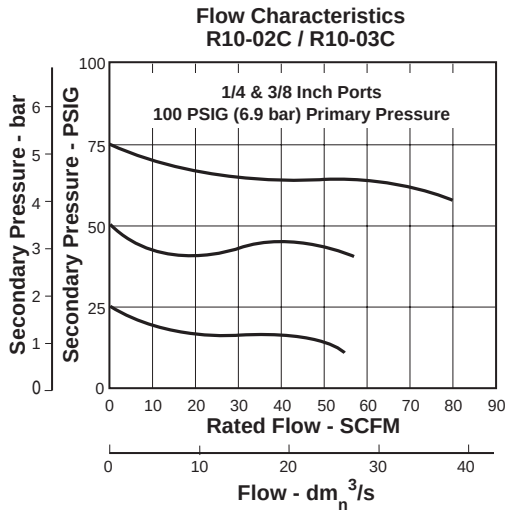

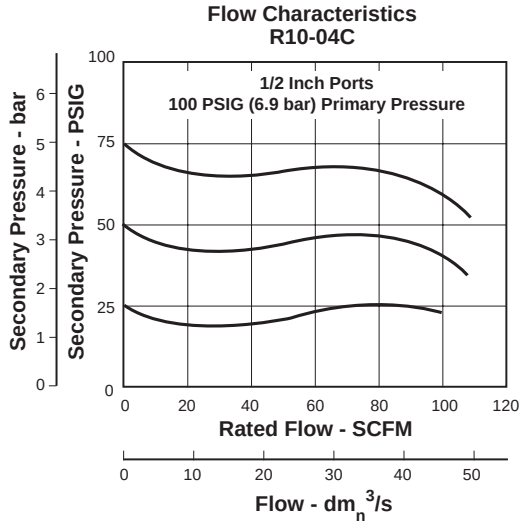

⚠ WARNING

Product rupture can cause serious injury.
Do not connect regulator to bottled gas.
Do not exceed maximum primary pressure rating.

⚠ CAUTION:

REGULATOR PRESSURE ADJUSTMENT – The working range of knob adjustment is designed to permit outlet pressures within their full range. Pressure adjustment beyond this range is also possible because the knob is not a limiting device. This is a common characteristic of most industrial regulators, and limiting devices may be obtained only by special design.
For best performance, regulated pressure should always be set by increasing the pressure up to the desired setting.

R10 / R11 Regulator Kits & Accessories

Control Knob (R10) R10Y54

Tee Handle (R11) SA16Y53

Gauges –
2" Dial Size, 1/4" Back Connection
0 to 60 PSIG (0 to 400 kPa) K4520N14060
2" Dial Size, 1/4" Back Connection
0 to 160 PSIG (0 to 1100 kPa) K4520N14160
2" Dial Size, 1/4" Back Connection
0 to 300 PSIG (0 to 2068 kPa) K4520N14300

Mounting Bracket Kit SAR10Y57

Panel Mount Nut –
Plastic R10X51-P
Aluminum R10X51-A

Repair Kits –
Non-Relieving RKR10KY
Non-Relieving (Viton) RKR10KYX64
Relieving RKR10Y
Relieving (Viton) RKR10YX64

Cage Kit –
R10 ..... CKR10Y
R11 ..... CKR11Y

Specifications

Gauge Ports (2) ..... 1/4 Inch

Port Threads ..... 1/4, 3/8, 1/2 Inch

Supply Pressure ..... 300 PSIG Maximum (20.4 bar)

Temperature Rating ..... 40°F to 125°F (4.4°C to 52°C)

Weight ..... 1.3 lb. (0.59 kg) / Unit
32 lb. (14.51 kg) / 24-Unit Master Pack

Materials of Construction

Adjusting Knob –
R10 ..... Acetal
R11 (Tee Handle) ..... Steel

Body ..... Zinc

Bottom Plug ..... Nylon
Optional ..... Brass

Elastomers ..... Buna N

Spring Case –
R10 ..... Acetal
R11 ..... Zinc

Pneumatic Division
Richland, Michigan
www.wattsfluidair.com

R119 Standard Regulators

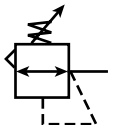



Features

- High Flow Performance Featuring Rugged Design for the Most Demanding Applications
- Ideal for Those Installations Calling for Constant Pressure with Wide Variation in Flow
- Diaphragm Operated Design with Balanced Poppet Design for Quick and Accurate Regulation
- Secondary Aspiration Plus Balanced Poppet Provides Quick Response and Accurate Pressure Regulation
- Heavy Duty Tee Handle Adjustment
- Reverse Flow Version Available
- Panel Mount Version Available
- High Flow: 1/4" - 100 SCFM§
  3/8" - 110 SCFM§
  1/2" - 150 SCFM§

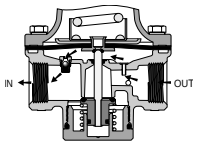

X80 Reverse Flow Option

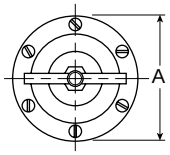

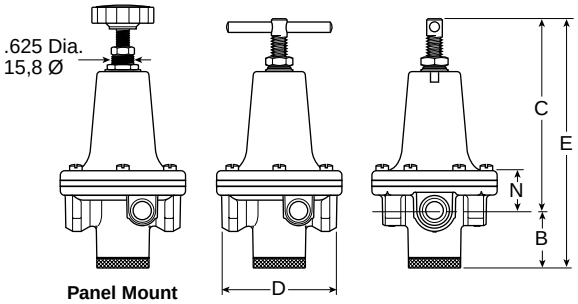

Panel Mount Version

Port Size	NPT Relieving	BSPP Relieving
Without Gauge 0-125 PSIG Reduced Pressure		
1/4"	**R119-02C**	R119G02C
3/8"	**R119-03C**	R119G03C
1/2"	**R119-04C**	R119G04C
With Gauge 0-125 PSIG Reduced Pressure		
1/4"	**R119-02CG**	—
3/8"	**R119-03CG**	—
1/2"	**R119-04CG**	—

Bold Items are Most Popular.
For other models refer to ordering information below.

§ SCFM = Standard cubic feet per minute at 100 PSIG inlet, 75 PSIG no flow secondary setting, and 20 PSIG pressure drop.

R119 Regulator Dimensions					
A	**B**	**C**	**D**	**E**	**N**
R119-02C, R119-03C					
3.00 (76)	1.38 (35)	4.60 (117)	2.74 (705)	5.98 (152)	0.96 (24)
R119-04C					
3.56 (90)	1.56 (40)	5.20 (132)	3.25 (83)	6.76 (172)	1.27 (32)

inches
(mm)

Ordering Information

R	119	—	02	C		/**

Port Threads
- **— NPT**
- G BSPP

Port Size
- **02 1/4 Inch**
- **03 3/8 Inch**
- **04 1/2 Inch**

Reduced Pressure Range
- A 0-25 PSIG
- B 0-60 PSIG
- **C 0-125 PSIG**
- D 0-250 PSIG

Options
- G Gauge
- K Non-Relieving
- X64** Fluorocarbon O-Rings and Diaphragm
- X80 Reverse Flow*
- X7† Brass Bottom Plug

* Reverse flow for use downstream of control valves.

Engineering Change Designator
Will be entered at factory.

†**NOTE:** Beginning on the following dates, the regulators listed will come standard with Nylon Bottom Plugs.
1/4" & 3/8" January 2008
1/2" March 2008

** Brass Bottom Plug Standard with X64 Option.

BOLD ITEMS ARE MOST POPULAR.

Pneumatic Division
Richland, Michigan
www.wattsfluidair.com

Technical Information

Flow Characteristics
R119-02C

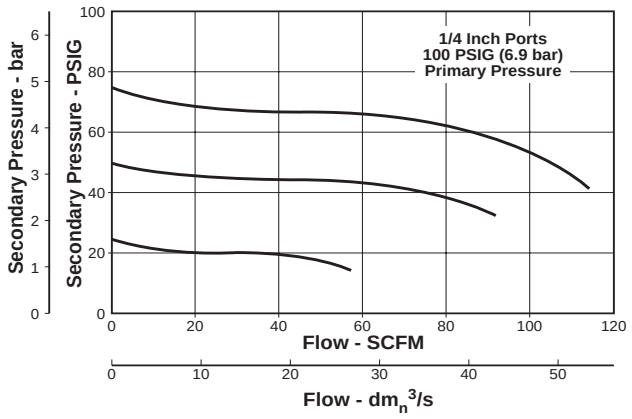

Flow Characteristics
R119-03C

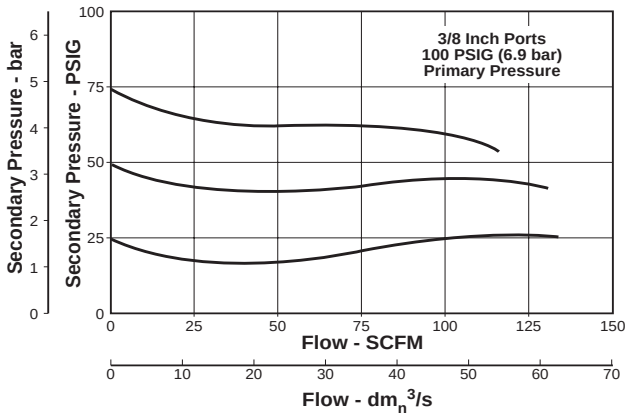

Flow Characteristics
R119-04C

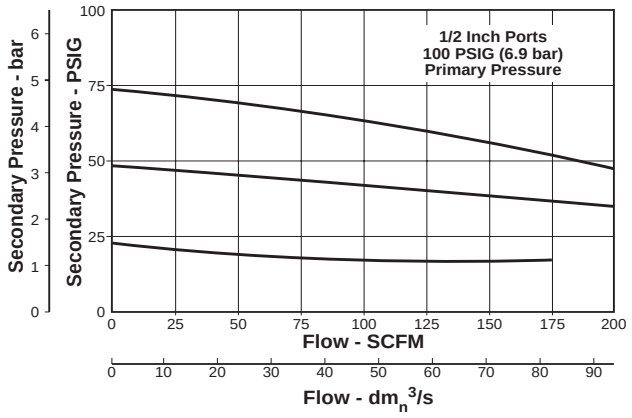

⚠ WARNING

Product rupture can cause serious injury.
Do not connect regulator to bottled gas.
Do not exceed maximum primary pressure rating.

⚠ CAUTION:

REGULATOR PRESSURE ADJUSTMENT – The working range of knob adjustment is designed to permit outlet pressures within their full range. Pressure adjustment beyond this range is also possible because the knob is not a limiting device. This is a common characteristic of most industrial regulators, and limiting devices may be obtained only by special design.
For best performance, regulated pressure should always be set by increasing the pressure up to the desired setting.

R119 Regulator Kits & Accessories

Gauges –

2" Dial Size, 1/4" Back Connection
0 to 60 PSIG (0 to 400 kPa) K4520N14060

2" Dial Size, 1/4" Back Connection
0 to 160 PSIG (0 to 1100 kPa) K4520N14160

2" Dial Size, 1/4" Back Connection
0 to 300 PSIG (0 to 2068 kPa) K4520N14300

Mounting Bracket Kit –

1/4", 3/8" SA15Y57
1/2" 18A57

Panel Mount Conversion Kit –

1/4", 3/8" 4202
1/2" 4204

Repair Kits –

Non-Relieving Diaphragm,
Valve Assembly (1/4", 3/8"; All PSIG) RK118Y

Relieving Diaphragm,
Valve Assembly (1/4", 3/8"; All PSIG) RK119Y

Non-Relieving Diaphragm,
Valve Assembly (1/2"; 25, 60, 125 PSIG) RK118A

Non-Relieving Diaphragm,
Valve Assembly (1/2"; 250 PSIG) RK118A250

Relieving Diaphragm,
Valve Assembly (1/2"; 25, 60, 125 PSIG) RK119A

Relieving Diaphragm,
Valve Assembly (1/2"; 250 PSIG) RK119A250

For Fluorocarbon Repair Kits, add X64 to Kit Number suffix.

Specifications

Gauge Ports (2) ..... 1/4 Inch

Port Threads ..... 1/4, 3/8, 1/2 Inch

Reduced Pressure Range ..... 2 to 125 PSIG (0.15 to 8.5 bar)

Supply Pressure ..... 300 PSIG Maximum (20.4 bar)

Temperature Rating ..... 40°F to 125°F (4.4°C to 52°C)

Weight –

R119-02, R119-03 ..... 1.8 lb. (0.82 kg) / Unit
26 lb. (11.79 kg) / 12-Unit Master Pack

R119-04 ..... 3.2 lb. (1.45 kg) / Unit
27 lb. (12.25 kg) / 8-Unit Master Pack

Materials of Construction

Adjusting Screw, Springs ..... Steel

Body, Spring Cage ..... Zinc

Bottom Plug ..... Nylon

Innervalve ..... Brass

Seals ..... Buna N

Pneumatic Division
Richland, Michigan
www.wattsfluidair.com

R119 Standard Regulators



Features

- High Flow Performance Featuring Rugged Design for the Most Demanding Applications
- Ideal for Those Installations Calling for Constant Pressure with Wide Variation in Flow
- Diaphragm Operated Design with Balanced Poppet Design for Quick and Accurate Regulation
- Secondary Aspiration Plus Balanced Poppet Provides Quick Response and Accurate Pressure Regulation
- Heavy Duty Tee Handle Adjustment
- Reverse Flow Version Available
- High Flow: 3/4" - 300 SCFM§
  1" - 400 SCFM§
  1-1/4" & 1-1/2" - 500 SCFM§

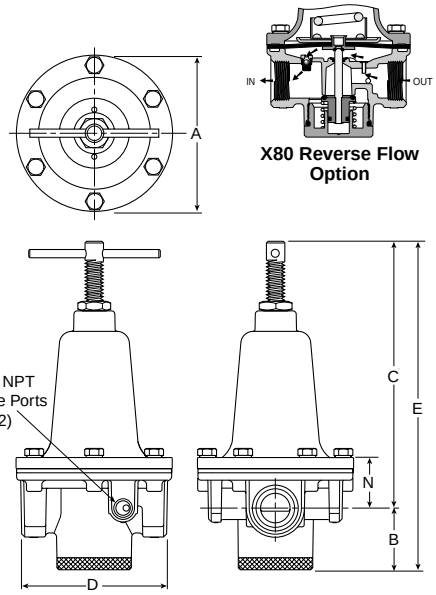

X80 Reverse Flow Option

Port Size	NPT Relieving	BSPP Relieving
Without Gauge 0-125 PSIG Reduced Pressure		
3/4"	**R119-06C**	R119G06C
1"	**R119-08C**	R119G08C
1-1/4"	**R119-10C**	R119G10C
1-1/2"	**R119-12C**	R119G12C
With Gauge 0-125 PSIG Reduced Pressure		
3/4"	**R119-06CG**	—
1"	**R119-08CG**	—
1-1/4"	**R119-10CG**	—
1-1/2"	**R119-12CG**	—

Bold Items are Most Popular.
For other models refer to ordering information below.

§ SCFM = Standard cubic feet per minute at 100 PSIG inlet, 75 PSIG no flow secondary setting, and 20 PSIG pressure drop.

R119 Regulator Dimensions					
A	**B**	**C**	**D**	**E**	**N**
R119-06C, R119-08C					
4.69 (119)	1.87 (47)	8.15 (207)	4.38 (111)	10.02 (255)	1.61 (41)
R119-10C, R119-12C					
4.94 (125)	1.81 (46)	8.53 (217)	4.94 (125)	10.34 (263)	1.99 (50.6)

inches
(mm)

⚠ WARNING
Do not connect regulator to bottled gas.
Do not exceed maximum primary pressure rating.
Product rupture can cause serious injury.

Ordering Information

R	119	—	06	C		/**

Port Threads
— NPT
G BSPP

Port Size
06 3/4 Inch
08 1 Inch
10 1-1/4 Inch
12 1-1/2 Inch

Reduced Pressure Range
C 0-125 PSIG
D 0-250 PSIG

Options	
G	Gauge
K	Non-Relieving
X64**	Fluorocarbon O-Rings and Diaphragm
X80	Reverse Flow*
X7†	Brass Bottom Plug

* Reverse flow for use downstream of control valves.

Engineering Change Designator
Will be entered at factory.

†**NOTE:** Beginning March 2008, Brass Bottom Plug is Optional - Nylon is Standard.

** Brass Bottom Plug Standard with X64 Option.

BOLD ITEMS ARE MOST POPULAR.

Pneumatic Division
Richland, Michigan
www.wattsfluidair.com

Technical Information

Flow Characteristics
R119-06C

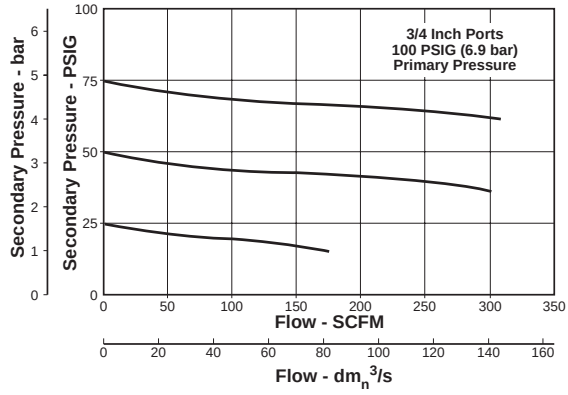

Flow Characteristics
R119-08C

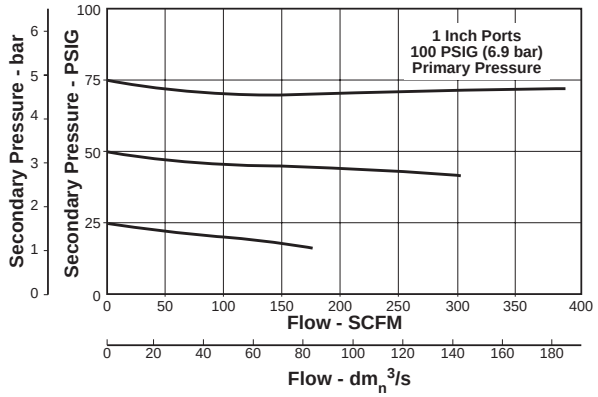

Flow Characteristics
R119-10C

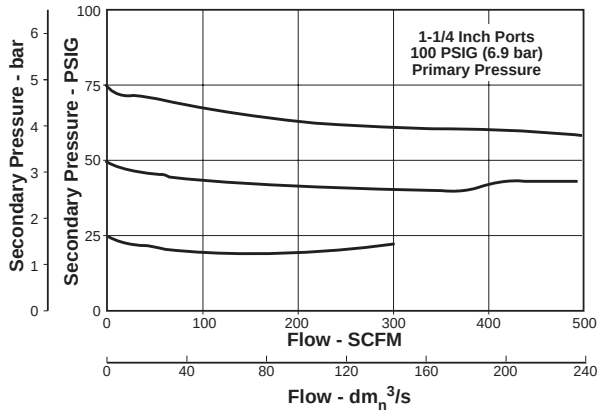

Flow Characteristics
R119-12C

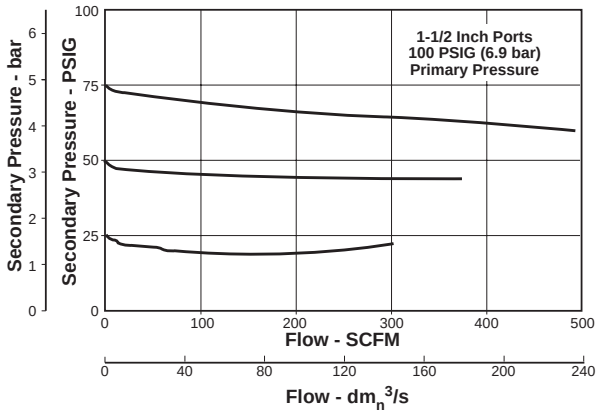

⚠ CAUTION:

REGULATOR PRESSURE ADJUSTMENT – The working range of knob adjustment is designed to permit outlet pressures within their full range. Pressure adjustment beyond this range is also possible because the knob is not a limiting device. This is a common characteristic of most industrial regulators, and limiting devices may be obtained only by special design.
For best performance, regulated pressure should always be set by increasing the pressure up to the desired setting.

R119 Regulator Kits & Accessories

Gauges –

2" Dial Size, 1/4" Back Connection
0 to 60 PSIG (0 to 400 kPa) K4520N14060

2" Dial Size, 1/4" Back Connection
0 to 160 PSIG (0 to 1100 kPa) K4520N14160

2" Dial Size, 1/4" Back Connection
0 to 300 PSIG (0 to 2068 kPa) K4520N14300

Mounting Bracket Kit 18B57

Repair Kits –

Non-Relieving Diaphragm,
Valve Assembly (3/4", 1") RK118B

Non-Relieving Diaphragm,
Valve Assembly (1-1/4", 1-1/2") RK118D

Relieving Diaphragm,
Valve Assembly (3/4", 1") RK119B

Relieving Diaphragm,
Valve Assembly (1-1/4", 1-1/2") RK119D

For Fluorocarbon Repair Kits, add X64 to Kit Number suffix.

Specifications

Gauge Ports (2) ..... 1/4 Inch

Port Threads ..... 3/4, 1, 1-1/4, 1-1/2 Inch

Reduced Pressure Range ..... 2 to 125 PSIG (0.15 to 8.5 bar)

Supply Pressure ..... 300 PSIG Maximum (20.4 bar)

Temperature Rating ..... 40°F to 125°F (4.4°C to 52°C)

Weight –

R119-06, R119-08 ..... 6.2 lb. (2.81 kg) / Unit
25 lb. (11.34 kg) / 4-Unit Master Pack

R119-10, R119-12 ..... 7.2 lb. (3.27 kg) / Unit
29 lb. (13.15 kg) / 4-Unit Master Pack

Materials of Construction

Adjusting Screw, Springs ..... Steel

Body, Spring Cage ..... Zinc

Bottom Plug ..... Nylon

Innervalve ..... Brass

Seals ..... Buna N

R119 Pilot Operated Regulators

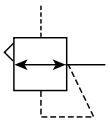



Features

- Adapted for Control by a Remote or Distant Small Pilot Regulator. Ideal for Maximum Capacity Requirements in Applications where Units are Not Readily Accessible
- High Flow Performance Featuring Rugged Design for the Most Demanding Applications
- Ideal for Those Installations Calling for Constant Pressure with Wide Variation in Flow
- Diaphragm Operated Design with Balanced Poppet and Constant Bleed Pilot for Quick and Accurate Regulation.
- Secondary Aspiration Plus Balanced Poppet Provides Quick Response and Accurate Pressure Regulation
- Reverse Flow Available
- High Flow: 1/4" - 100 SCFM§
  3/8" - 110 SCFM§
  1/2" - 150 SCFM§

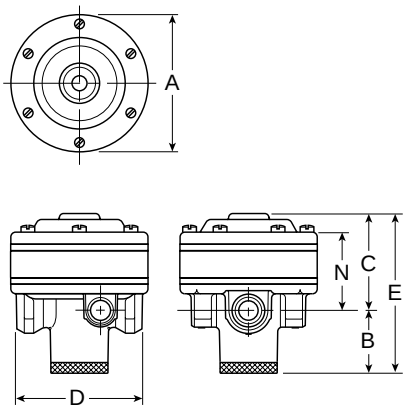

Port Size	NPT Relieving	BSPP Relieving
Without Gauge 0-125 PSIG Reduced Pressure		
1/4"	**R119-02J**	R119G02J
3/8"	**R119-03J**	R119G03J
1/2"	**R119-04J**	R119G04J

Bold Items are Most Popular.
For other models refer to ordering information below.

§ SCFM = Standard cubic feet per minute at 100 PSIG inlet, 75 PSIG no flow secondary setting, and 20 PSIG pressure drop.

R119 Regulator Dimensions					
A	**B**	**C**	**D**	**E**	**N**
R119-02J, R119-03J					
3.00 (76)	1.38 (35)	2.10 (53)	2.74 (70)	3.48 (88)	1.69 (43)
R119-04J					
3.56 (90)	1.56 (40)	2.31 (59)	3.34 (85)	3.87 (98)	1.93 (49)

inches
(mm)

⚠ WARNING
Do not connect regulator to bottled gas.
Do not exceed maximum primary pressure rating.
Product rupture can cause serious injury.

Ordering Information

R	119	—	02	J		/**

Port Threads
— NPT
G BSPP

Port Size
02 1/4 Inch
03 3/8 Inch
04 1/2 Inch

Reduced Pressure Range
J Air Pilot Operated

Options	
K	Non-Relieving
X64*	Fluorocarbon O-Rings and Diaphragm
X71	Non-Bleed Pilot (For use with Electronic Controllers)
X7†	Brass Bottom Plug

Engineering Change Designator
Will be entered at factory.

†**NOTE:** Beginning on the following dates, the regulators listed will come standard with Nylon Bottom Plugs.
1/4" & 3/8" January 2008
1/2" March 2008

* Brass Bottom Plug Standard with X64 Option.

BOLD ITEMS ARE MOST POPULAR.

Pneumatic Division
Richland, Michigan
www.wattsfluidair.com

Technical Information

Flow Characteristics
R119-02J

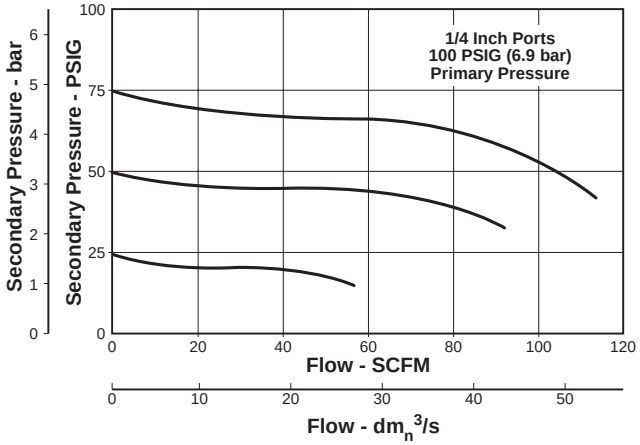

Flow Characteristics
R119-03J

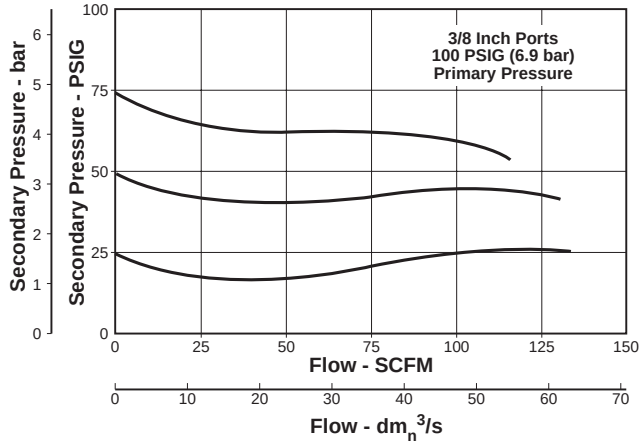

Flow Characteristics
R119-04J

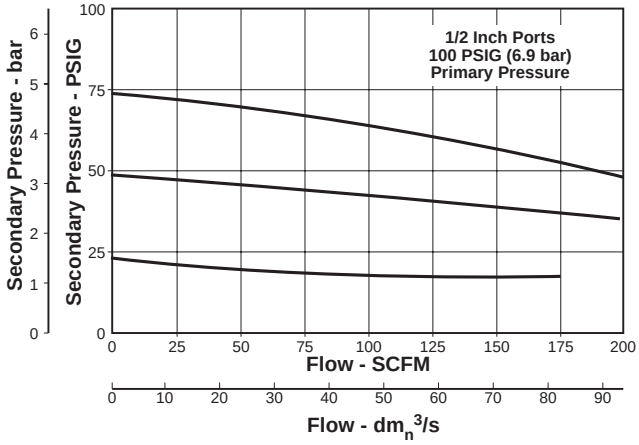

B

R119 Regulator Kits & Accessories

Gauges –

2" Dial Size, 1/4" Back Connection
0 to 60 PSIG (0 to 400 kPa) K4520N14060

2" Dial Size, 1/4" Back Connection
0 to 160 PSIG (0 to 1100 kPa) K4520N14160

2" Dial Size, 1/4" Back Connection
0 to 300 PSIG (0 to 2068 kPa) K4520N14300

Repair Kits –

Non-Relieving Diaphragm,
Valve Assembly (1/2") RK118X20A

Non-Relieving Diaphragm,
Valve Assembly (1/4", 3/8") RK118X20Y

Relieving Diaphragm,
Valve Assembly (1/2") RK119X20A

Relieving Diaphragm,
Valve Assembly (1/4", 3/8") RK119X20Y

For Fluorocarbon Repair Kits, add X64 to Kit Number suffix.

Specifications

Gauge Ports (2) .....1/4 Inch

Port Threads .....1/4, 3/8, 1/2 Inch

Reduced Pressure Range –
Adjustable to within 5 to 7 PSIG of Supply Pressure

Supply Pressure .....300 PSIG Maximum (20.4 bar)

Air Consumption –
Constant bleed from air pilot chamber: approx. 0.17 SCFM (10 SCFH)

Temperature Rating .....40°F to 125°F (4.4°C to 52°C)

Weight –
R119-02J, R119-03J ..... 1.6 lb. (0.73 kg) / Unit
19 lb. (8.62 kg) / 12-Unit Master Pack
R119-04J ..... 2.6 lb. (1.18 kg) / Unit
21 lb. (9.53 kg) / 8-Unit Master Pack

Materials of Construction

Body, Ring, Top Plate .....Zinc

Bottom Plug ..... Nylon

Innervalve ..... Brass

Seals ..... Buna N

Pneumatic Division
Richland, Michigan
www.wattsfluidair.com

R119 Pilot Operated Regulators

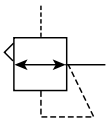



Features

- Adapted for Control by a Remote or Distant Small Pilot Regulator. Ideal for Maximum Capacity Requirements in Applications where Units are Not Readily Accessible
- High Flow Performance Featuring Rugged Design for the Most Demanding Applications
- Ideal for Those Installations Calling for Constant Pressure with Wide Variation in Flow
- Diaphragm Operated Design with Balanced Poppet and Constant Bleed Pilot for Quick and Accurate Regulation.
- Secondary Aspiration Plus Balanced Poppet Provides Quick Response and Accurate Pressure Regulation
- Reverse Flow Version Available
- High Flow: 3/4", 1" - 300 SCFM§, 1-1/4" & 1-1/2" - 380+ SCFM§

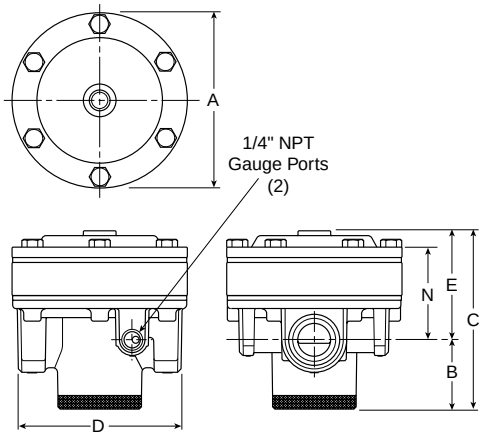

Port Size	NPT Relieving	BSPP Relieving
Without Gauge 0-125 PSIG Reduced Pressure		
3/4"	**R119-06J**	R119G06J
1"	**R119-08J**	R119G08J
1-1/4"	**R119-10J**	R119G10J
1-1/2"	**R119-12J**	R119G12J

Bold Items are Most Popular.
For other models refer to ordering information below.

§ SCFM = Standard cubic feet per minute at 100 PSIG inlet, 75 PSIG no flow secondary setting, and 20 PSIG pressure drop.

R119 Regulator Dimensions					
A	**B**	**C**	**D**	**E**	**N**
R119-06J, R119-08J					
4.72 (120)	1.87 (47)	2.94 (75)	4.38 (111)	4.81 (122)	2.47 (63)
R119-10J, R119-12J					
4.94 (125)	1.81 (46)	3.32 (84)	4.94 (125)	5.13 (130)	2.88 (73)

inches (mm)

⚠ WARNING
Do not connect regulator to bottled gas.
Do not exceed maximum primary pressure rating.
Product rupture can cause serious injury.

Ordering Information

R	119	—	06	J		/**

Port Threads
- **— NPT**
- G BSPP

Port Size
- **06 3/4 Inch**
- **08 1 Inch**
- **10 1-1/4 Inch**
- **12 1-1/2 Inch**

Reduced Pressure Range
- **J Air Pilot Operated**

Options
- K Non-Relieving
- X64* Fluorocarbon O-Rings and Diaphragm
- X71 Non-Bleed Pilot (For use with Electronic Controllers)
- X7† Brass Bottom Plug

Engineering Change Designator
Will be entered at factory.

†**NOTE:** Beginning March 2008, Brass Bottom Plug is Optional - Nylon is Standard.

* Brass Bottom Plug Standard with X64 Option.

BOLD ITEMS ARE MOST POPULAR.

Pneumatic Division
Richland, Michigan
www.wattsfluidair.com

Technical Information

Flow Characteristics
R119-06J

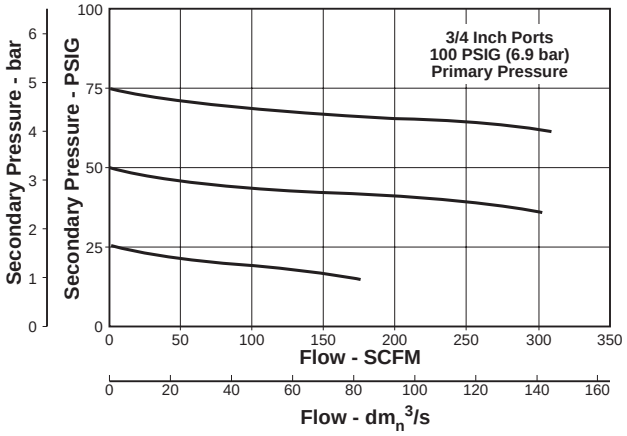

Flow Characteristics
R119-08J

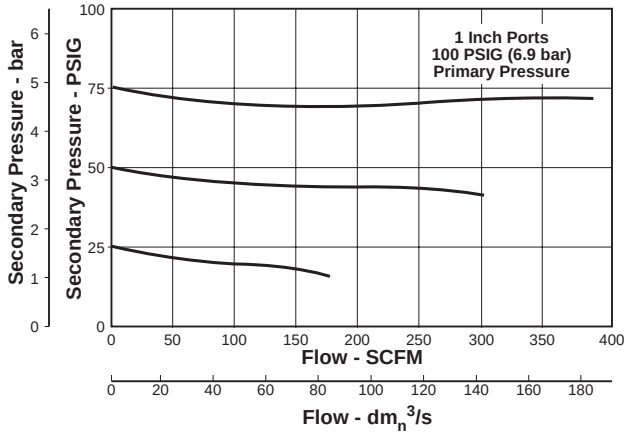

Flow Characteristics
R119-10C

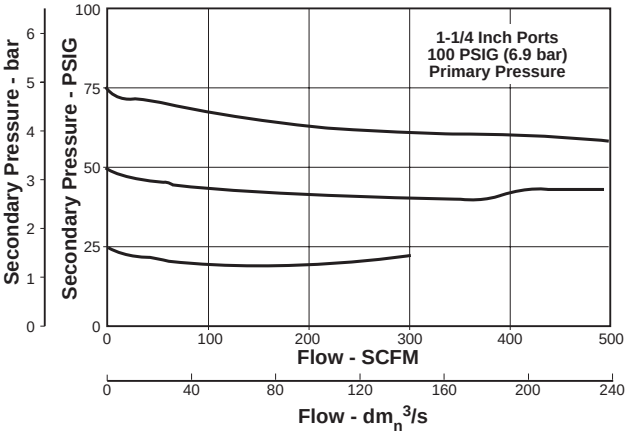

Flow Characteristics
R119-12C

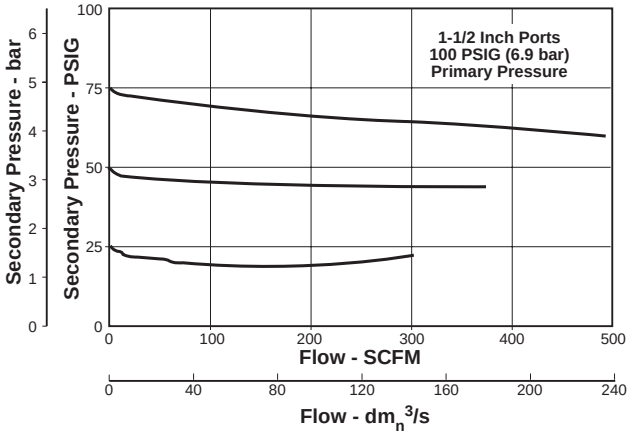

B

R119 Regulator Kits & Accessories

Gauges –

2" Dial Size, 1/4" Back Connection
0 to 60 PSIG (0 to 400 kPa) K4520N14060

2" Dial Size, 1/4" Back Connection
0 to 160 PSIG (0 to 1100 kPa) K4520N14160

2" Dial Size, 1/4" Back Connection
0 to 300 PSIG (0 to 2068 kPa) K4520N14300

Repair Kits –

Non-Relieving Diaphragm,
Valve Assembly (3/4", 1") RK118X20B

Non-Relieving Diaphragm,
Valve Assembly (1-1/4", 1-1/2") RK118X20D

Relieving Diaphragm,
Valve Assembly (3/4", 1") RK119X20B

Relieving Diaphragm,
Valve Assembly (1-1/4", 1-1/2") RK119X20D

For Fluorocarbon Repair Kits, add X64 to Kit Number suffix.

Specifications

Gauge Ports (2) .....1/4 Inch

Port Threads ..... 3/4, 1, 1-1/4, 1-1/2 Inch

Reduced Pressure Range –
Adjustable to Within 5 to 7 PSIG of Supply Pressure

Supply Pressure .....300 PSIG Maximum (20.4 bar)

Air Consumption –
Constant bleed from air pilot chamber: approx 0.17 SCFM (10 SCFH)

Temperature Rating .....40°F to 125°F (4.4°C to 52°C)

Weight –
R119-06J, R119-08J ..... 5.2 lb. (2.36 kg) / Unit
42 lb. (19.05 kg) / 8-Unit Master Pack
R119-10J, R119-12J ..... 5.6 lb. (2.54 kg) / Unit
46 lb. (20.87 kg) / 8-Unit Master Pack

Materials of Construction

Body, Ring, Top Plate .....Zinc

Bottom Plug ..... Nylon

Innervalve ..... Brass

Seals ..... Buna N

R119 Pilot Operated Regulators

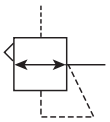



Features

- Adapted for Control by a Remote or Distant Small Pilot Regulator. Ideal for Maximum Capacity Requirements in Applications where Units are Not Readily Accessible
- High Flow Performance Featuring Rugged Design for the Most Demanding Applications
- Ideal for Those Installations Calling for Constant Pressure with Wide Variation in Flow
- Piston Operated Design with Balanced Poppet and Dual Constant Bleed for Quick and Accurate Regulation
- High Flow: 2" & 2-1/2" - 1500+ SCFM§

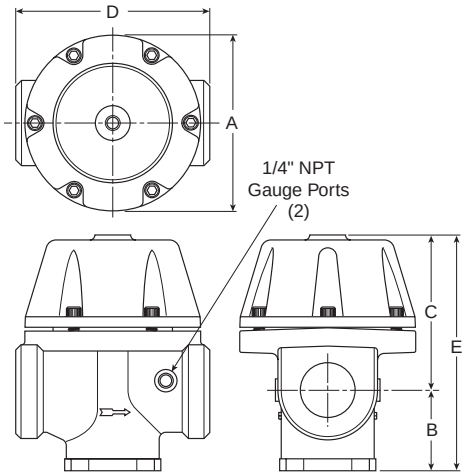

Port Size	NPT Relieving	BSPP Relieving
Without Gauge 0-125 PSIG Reduced Pressure		
2"	**R119-16J**	R119G16J
2-1/2"	**R119-20J**	R119G20J

Bold Items are Most Popular.
For other models refer to ordering information below.

§ SCFM = Standard cubic feet per minute at 100 PSIG inlet, 75 PSIG no flow secondary setting, and 20 PSIG pressure drop.

R119 Regulator Dimensions				
A	**B**	**C**	**D**	**E**
R119-16J, R119-20J				
6.63 (168)	3.09 (79)	7.78 (147)	7.31 (185)	10.87 (276)

inches
(mm)

⚠ WARNING
Do not connect regulator to bottled gas.
Do not exceed maximum primary pressure rating.
Product rupture can cause serious injury.

Ordering Information

R	119	—	16	J

Port Threads
— NPT
G BSPP

Port Size
16 2 Inch
20 2-1/2 Inch

Reduced Pressure Range
J Air Pilot Operated

NOTE: Non-Relieving Not Available.

BOLD ITEMS ARE MOST POPULAR.

Pneumatic Division
Richland, Michigan
www.wattsfluidair.com

Technical Information

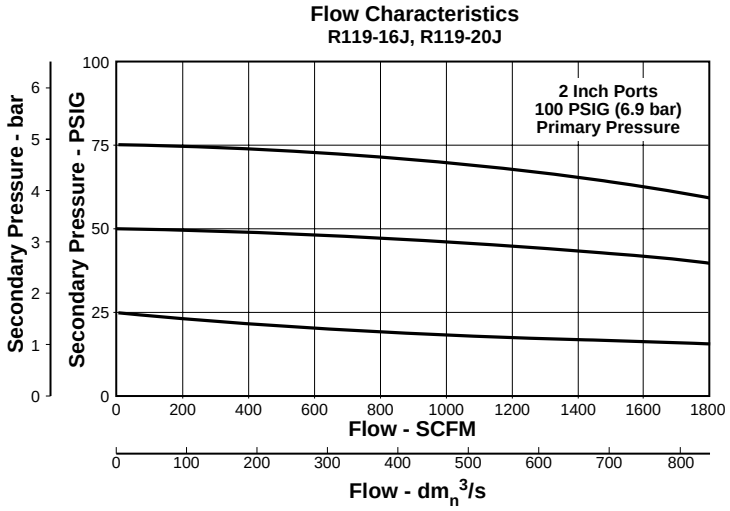

B

R119 Regulator Kits & Accessories

Gauges –

2" Dial Size, 1/4" Back Connection
0 to 60 PSIG (0 to 400 kPa) K4520N14060

2" Dial Size, 1/4" Back Connection
0 to 160 PSIG (0 to 1100 kPa) K4520N14160

2" Dial Size, 1/4" Back Connection
0 to 300 PSIG (0 to 2068 kPa) K4520N14300

Repair Kits –

Piston Type Regulation (2", 2-1/2") RK119G

Specifications

Gauge Ports (2) .....1/4 Inch
(Can be used for Full Flow)
High Pressure Outlet for Pilot (Not seen in photo) .....1/4 Inch

Port Threads ..... 2, 2-1/2 Inch

Reduced Pressure Range –
Adjustable to Within 5 to 7 PSIG of Supply Pressure

Supply Pressure .....300 PSIG Maximum (20.4 bar)

Air Consumption –
Constant Bleed from Air Pilot Chamber:
Approx. 0.17 SCFM (10 SCFH)

Constant Bleed from Reduced Pressure:
Approx. 0.17 SCFM (10 SCFH)

Temperature Rating .....40°F to 125°F (4.4°C to 52°C)

Weight –
R119-16J, R119-20J ..... 11 lb. (4.99 kg) / Unit
12 lb. (5.44 kg) / 1-Unit Master Pack

Materials of Construction

Body, Piston .....Aluminum

Seals ..... Buna N

Innervalve ..... Brass & Stainless

Pneumatic Division
Richland, Michigan
www.wattsfluidair.com

W51R Dial Regulator – Relieving

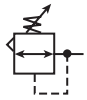



Features

- Pressure Reference Indicating Dial Face
- Non-rising, Pressure-adjustment Knob
- Self-relieving
- Full Pressure Adjustment in Less than One Full Turn
- Recommended for Pilot-air Applications
- Flow Capacity: 1/4" – 0.7 SCFM§

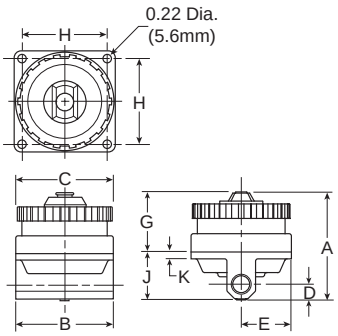

Port Size	Standard Pressure 5 to 160 PSIG (0,34 to 11 bar)	Low Pressure 2 to 40 PSIG (0,14 to 3 bar)
1/4"	**W51R126RA**	**W51R125RA**

Bold Items are Most Popular.
For other models refer to ordering information below.

§ SCFM = Standard cubic feet per minute at 100 PSIG inlet, 90 PSIG no flow secondary setting, and 25 PSIG pressure drop.

W51R Regulator Dimensions				
A 2.80 (71)	**B** 2.60 (66)	**C** 2.60 (66)	**D** 0.40 (10)	**E** 1.30 (33)
G 1.56 (39.6)	**H** 2.20 (56)	**J** 1.25 (31.8)	**K** .18 (4.6)	

inches
(mm)

Ordering Information

W51R	1	26	R	A	

Port Size	Springs	Adjustment	Engineering Level	Thread Type
1 1/4 Inch	**25 2 to 40 PSIG** **26 5 to 160 PSIG**	**R Relieving**	**A Current**	**Blank NPT** 1 BSPP

BOLD ITEMS ARE MOST POPULAR.

Pneumatic Division
Richland, Michigan
www.wattsfluidair.com

Technical Information

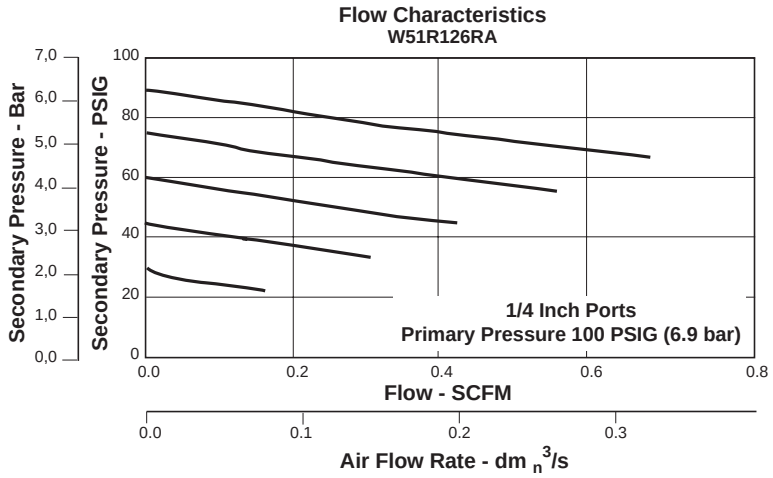

⚠ WARNING

Product rupture can cause serious injury.
Do not connect regulator to bottled gas.
Do not exceed maximum primary pressure rating.

⚠ CAUTION:

REGULATOR PRESSURE ADJUSTMENT – The working range of knob adjustment is designed to permit outlet pressures within their full range. Pressure adjustment beyond this range is also possible because the knob is not a limiting device. This is a common characteristic of most industrial regulators, and limiting devices may be obtained only by special design.
For best performance, regulated pressure should always be set by increasing the pressure up to the desired setting.

W51R Regulator Kits & Accessories

Adjustment Dial Knob RRP-16-024-80
O-ring, Repair Kit GRP-95-260
Piston and Bonnet Repair Kit RRP-95-765-80
Spring, Regulation, Belleville Washer
2 to 40 PSIG (276 kPa) RRP-95-906-80
5 to 160 PSIG (1103 kPa) RRP-95-905-80
Tamper Resistant Kit RRP-95-585-80
Valve, Pilot with O-ring and Valve Spring RRP-96-934-80

Specifications

Adjusting Range Pressure ..... 2 to 40 PSIG (14 to 276 kPa)
5 to 160 PSIG (34 to 1103 kPa)
Bleed Rate ..... 0.05 SCFM
Maximum Operating Temperature ..... 150°F (65.5°C)
Maximum Supply Pressure ..... 300 PSIG (2068 kPa)
Port Threads ..... 1/4"
Weight ..... 1.3 lb. (0.5 kg)

Materials of Construction

Body ..... Zinc
Bonnet ..... Zinc / Brass
Piston ..... Acetal
Seals ..... Nitrile
Springs ..... Steel
Valve Assembly ..... Brass / Nitrile / Acetal

Pneumatic Division
Richland, Michigan
www.wattsfluidair.com

W52R Dial Regulator – Relieving

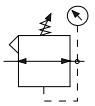



Features

- Balanced Poppet Design
- Non-rising, Pressure-adjusting Dial
- High-relief Flow (3/16" Relief Orifice)
- Two 1/4" Gauge Ports
- Piston Operated
- Flow Capacity: 1/4" – 117 SCFM§
  3/8" – 180 SCFM§
  1/2" – 195 SCFM§
  3/4" – 220 SCFM§

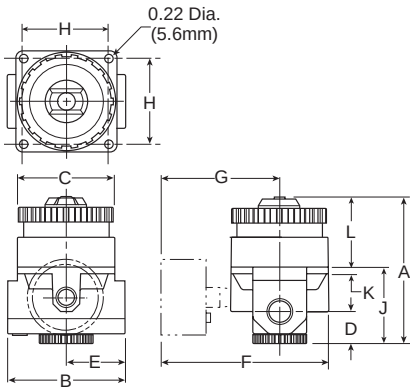

Port Size	High Flow 5 to 160 PSIG (0,34 to 11 bar)	Low Pressure 2 to 40 PSIG (0,14 to 3 bar)
1/4"	**W52R126RA**	**W52R125RA**
3/8"	**W52R226RA**	**W52R225RA**
1/2"	**W52R326RA**	**W52R325RA**
3/4"	**W52R426RA**	**W52R425RA**

Bold Items are Most Popular.
For other models refer to ordering information below.

§ SCFM = Standard cubic feet per minute at 100 PSIG inlet, (1/4, 1/2 & 3/4) 90 PSIG, (3/8) 80 PSIG no flow secondary setting, and 25 PSIG pressure drop.

W52R Regulator Dimensions				
A 4.10 (104)	**B** 3.20 (81)	**C** 2.60 (66)	**D** 0.95 (24)	**E** 1.60 (71)
F 4.30 (109)	**G** 2.70 (69)	**H** 2.20 (56)	**J** 2.08 (52.8)	**K** .18 (4.6)
L 2.07 (52.6)				

inches
(mm)

Ordering Information

W52R	1	26	R	A	

Port Size
1 1/4 Inch
2 3/8 Inch
3 1/2 Inch
4 3/4 Inch

Springs
25 2 to 40 PSIG
26 5 to 160 PSIG

Adjustment
R Relieving

Engineering Level
A Current

Thread Type
Blank NPT
1 BSPP

BOLD ITEMS ARE MOST POPULAR.

Pneumatic Division
Richland, Michigan
www.wattsfluidair.com

Technical Information

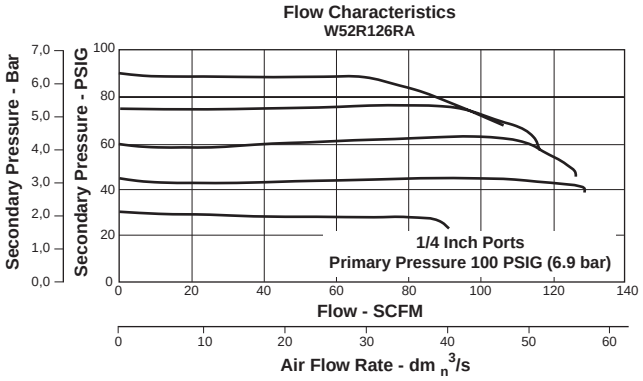

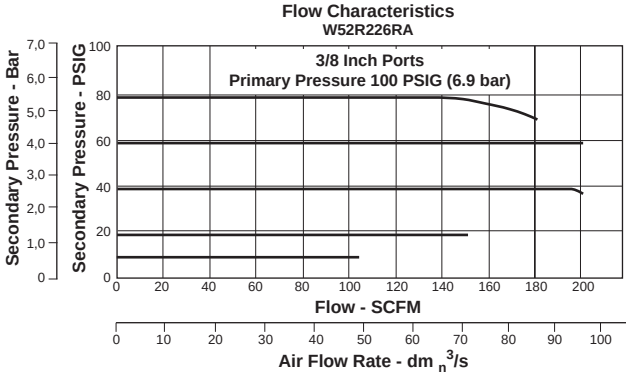

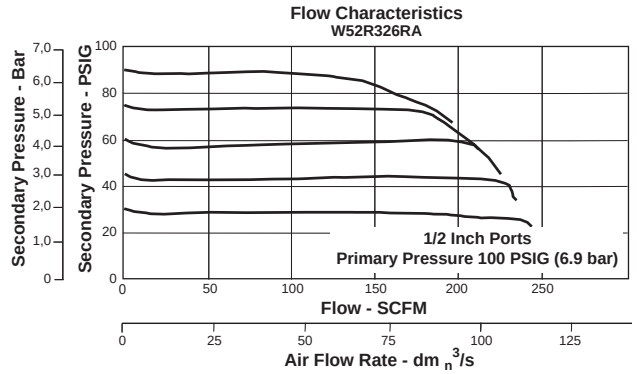

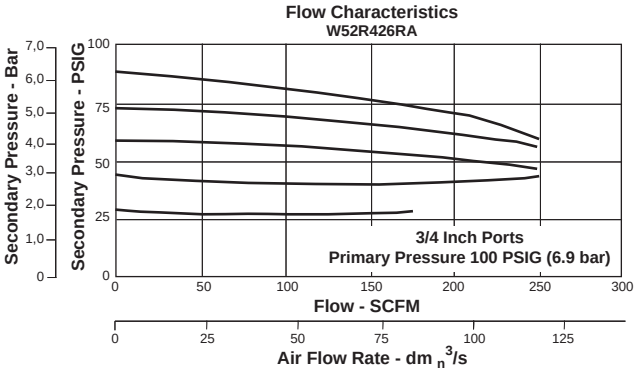

⚠ WARNING

Product rupture can cause serious injury.
Do not connect regulator to bottled gas.
Do not exceed maximum primary pressure rating.

⚠ CAUTION:

REGULATOR PRESSURE ADJUSTMENT – The working range of knob adjustment is designed to permit outlet pressures within their full range. Pressure adjustment beyond this range is also possible because the knob is not a limiting device. This is a common characteristic of most industrial regulators, and limiting devices may be obtained only by special design.
For best performance, regulated pressure should always be set by increasing the pressure up to the desired setting.

W52R Regulator Kits & Accessories

Adjustment Dial Knob RRP-16-024-80
O-ring, Repair Kit GRP-95-260-80
Piston Bottom and O-ring Seal RRP-95-192-80
Pistons and Bonnet Repair Kit RRP-95-766-80
Spring, Regulation, Belleville Washer
2 to 40 PSIG Range RRP-95-906-80
5 to 160 PSIG Range RRP-95-905-80
Tamper Resistant Kit RRP-95-585-80
Valve, Main with U-Cup Seal & Bottom Plug RRP-95-914-80
Valve, Main with U-Cup Seal RRP-95-151-80
Valve, Pilot with O-ring and Valve Spring RRP-96-934-80

Specifications

Adjusting Range Pressure ..... 2 to 40 PSIG (14 to 276 kPa)
5 to 160 PSIG (34 to 1103 kPa)
Bleed Rate ..... 0.05 SCFM
Gauge Ports ..... Two Ports 1/4"
(Can be used as additional High Flow 1/4 Inch Outlet Ports)
Maximum Operating Temperature ..... 150°F (65.5°C)
Maximum Supply Pressure ..... 300 PSIG (2068 kPa)
Port Threads ..... 1/4", 3/8", 1/2", 3/4"
Weight ..... 2.3 lb. (1.04 kg)

Materials of Construction

Body ..... Zinc
Bonnet ..... Zinc / Brass
Piston ..... Acetal
Seals ..... Nitrile
Springs ..... Steel
Valve Assembly ..... Brass / Nitrile / Acetal

Pneumatic Division
Richland, Michigan
www.wattsfluidair.com

W53R Dial Regulator – Relieving

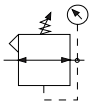



Features

- Balanced Poppet Design
- Non-rising, Pressure-adjusting Dial.
- High-relief Flow (3/16" Relief Orifice)
- Two 1/4" Gauge Ports
- Piston Operated.
- Flow Capacity: 3/4" – 400 SCFM§
  1" – 650 SCFM§
  1-1/4" – 700 SCFM§

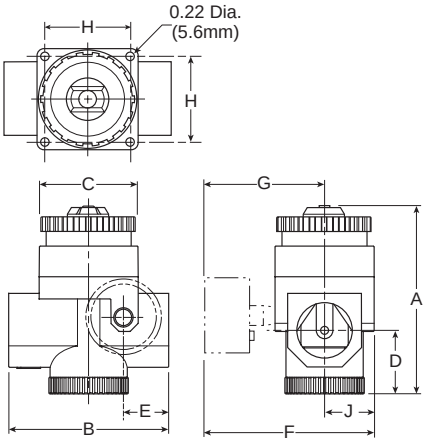

Port Size	High Flow 5 to 160 PSIG (0.34 to 11 bar)	Low Pressure 2 to 40 PSIG (0.14 to 3 bar)
3/4"	**W53R426RA**	**W53R425RA**
1"	**W53R526RA**	**W53R525RA**
1-1/4"	**W53R626RA**	**W53R625RA**

Bold Items are Most Popular.
For other models refer to ordering information below.

§ SCFM = Standard cubic feet per minute at 100 PSIG inlet, 90 PSIG no flow secondary setting, and 10 PSIG pressure drop.

W53R Regulator Dimensions				
A	**B**	**C**	**D**	**E**
5.20 (132)	4.30 (109)	2.60 (66)	1.70 (43)	1.23 (31)
F	**G**	**H**	**J**	
4.30 (109)	3.00 (76)	2.20 (56)	1.21 (33)	

inches
(mm)

Ordering Information

W53R	4	26	R	A	

Port Size
4 3/4 Inch
5 1 Inch
6 1-1/4 Inch

Springs
25 2 to 40 PSIG
26 5 to 160 PSIG

Adjustment
R Relieving

Engineering Level
A Current

Thread Type
Blank NPT
1 BSPP

BOLD ITEMS ARE MOST POPULAR.

Pneumatic Division
Richland, Michigan
www.wattsfluidair.com

Technical Information

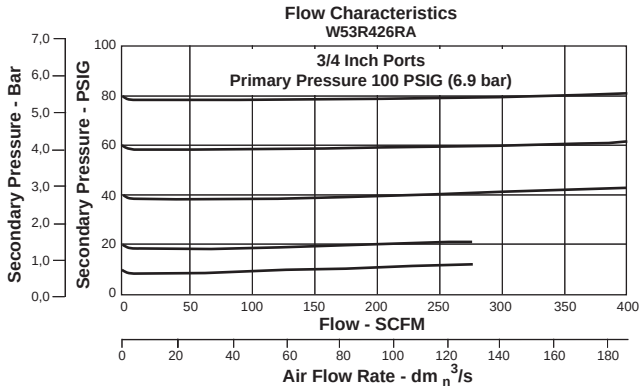

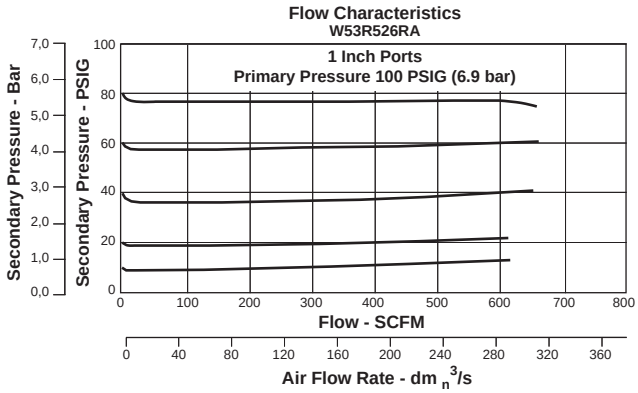

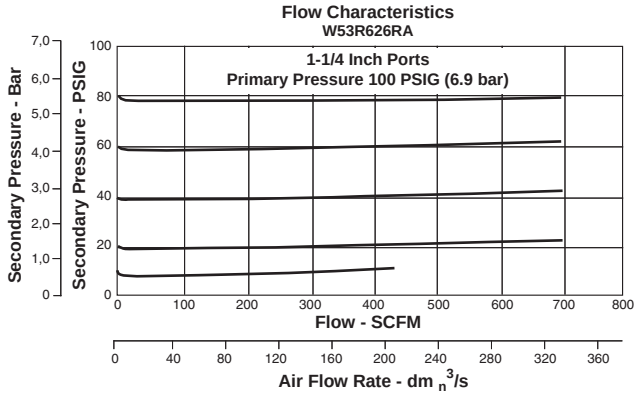

B

⚠ WARNING

Product rupture can cause serious injury.
Do not connect regulator to bottled gas.
Do not exceed maximum primary pressure rating.

⚠ CAUTION:

REGULATOR PRESSURE ADJUSTMENT – The working range of knob adjustment is designed to permit outlet pressures within their full range. Pressure adjustment beyond this range is also possible because the knob is not a limiting device. This is a common characteristic of most industrial regulators, and limiting devices may be obtained only by special design.
For best performance, regulated pressure should always be set by increasing the pressure up to the desired setting.

W53R Regulator Kits & Accessories

Adjustment Dial Knob RRP-16-024-80
O-ring, Repair Kit GRP-95-261-80
Piston, Bottom and O-ring Seal RRP-95-192-80
Pistons and Bonnet Repair Kit RRP-95-766-80
Spring, Regulation, Belleville Washer
2 to 40 PSIG Range RRP-95-906-80
5 to 160 PSIG Range RRP-95-905-80
Tamper Resistant Kit RRP-95-585-80
Valve, Main with O-ring Seal RRP-95-152-80
Valve, Pilot with O-ring and Valve Spring RRP-96-935-80

Specifications

Adjusting Range Pressure ..... 2 to 40 PSIG (14 to 276 kPa)
5 to 160 PSIG (34 to 1103 kPa)
Bleed Rate ..... 0.05 SCFM
Gauge Ports ..... Two Ports 1/4"
(Can be used as additional High Flow 1/4 Inch Outlet Ports)
Maximum Operating Temperature ..... 150°F (65.5°C)
Maximum Supply Pressure ..... 300 PSIG (2068 kPa)
Port Threads ..... 3/4", 1", 1-1/4"
Weight ..... 4.0 lb. (1.8 kg)

Materials of Construction

Body ..... Zinc
Bonnet ..... Zinc / Brass
Piston ..... Acetal
Seals ..... Nitrile
Springs ..... Steel
Valve Assembly ..... Brass / Nitrile / Acetal

Pneumatic Division
Richland, Michigan
www.wattsfluidair.com

W54R Dial Regulator – Relieving

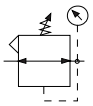



Features

- Balanced Poppet Design
- Non-rising, Pressure-adjusting Dial
- High-relief Flow (3/16" Relief Orifice)
- Two 1/4" Gauge Ports
- Piston Operated
- Flow Capacity: 1-1/2" – 1,600 SCFM§
  2" – 1,600 SCFM§.

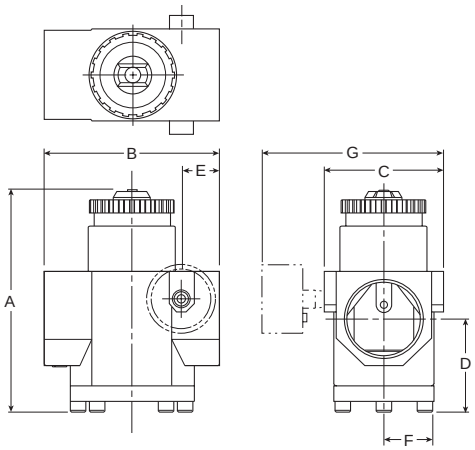

Port Size	High Flow 5 to 160 PSIG (0.34 to 11 bar)	Low Pressure 2 to 40 PSIG (0.14 to 2.8 bar)
1-1/2"	**W54R726RA**	**W54R725RA**
2"	**W54R826RA**	**W54R825RA**

Bold Items are Most Popular.
For other models refer to ordering information below.

§ SCFM = Standard cubic feet per minute at 100 PSIG inlet, 90 PSIG no flow secondary setting, and 10 PSIG pressure drop

W54R Regulator Dimensions				
A 6.80 (173)	**B** 5.30 (135)	**C** 32.60 (90	**D** 2.80 (71)	**E** 1.15 (29)
F 1.80 (489)	**G** 5.30 (135)			

inches
(mm)

Ordering Information

W54R	7	26	R	A	

Port Size
7 1-1/2 Inch
8 2 Inch

Springs
25 2 to 40 PSIG
26 5 to 160 PSIG

Adjustment
R Relieving

Engineering Level
A Current

Thread Type
Blank NPT
1 BSPP

BOLD ITEMS ARE MOST POPULAR.

Pneumatic Division
Richland, Michigan
www.wattsfluidair.com

Technical Information

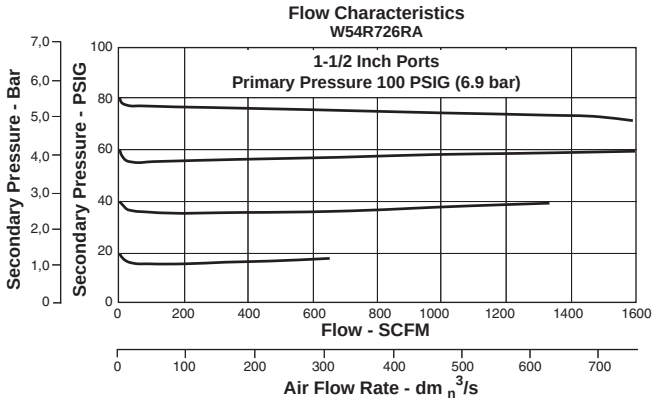

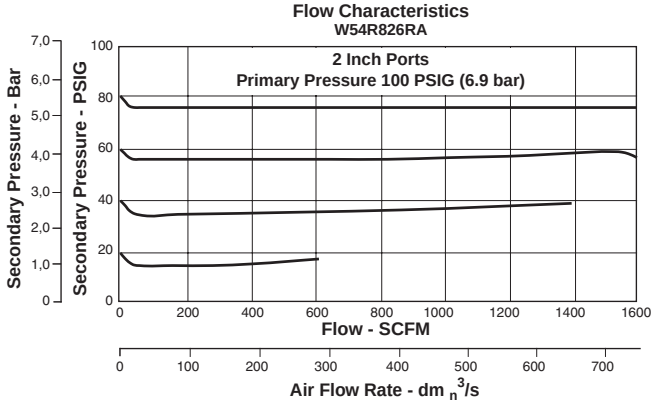

B

⚠ WARNING

Product rupture can cause serious injury.
Do not connect regulator to bottled gas.
Do not exceed maximum primary pressure rating.

⚠ CAUTION:

REGULATOR PRESSURE ADJUSTMENT – The working range of knob adjustment is designed to permit outlet pressures within their full range. Pressure adjustment beyond this range is also possible because the knob is not a limiting device. This is a common characteristic of most industrial regulators, and limiting devices may be obtained only by special design.
For best performance, regulated pressure should always be set by increasing the pressure up to the desired setting.

W54R Regulator Kits & Accessories

Adjustment Dial Knob RRP-16-024-80
O-ring, Repair Kit GRP-95-262-80
Piston, Bottom and O-ring Seal RRP-95-192-80
Pistons and Bonnet Repair Kit RRP-95-766-80
Spring, Regulation, Belleville Washer
2 to 40 PSIG Range RRP-95-906-80
5 to 160 PSIG Range RRP-95-905-80
Spring, Main Valve RRP-95-024-80
Tamper Resistant Kit RRP-95-585-80
Valve, Main with O-ring Seal RRP-95-153-80
Valve, Pilot with O-ring and Valve Spring RRP-96-935-80

Specifications

Adjusting Range Pressure ..... 2 to 40 PSIG (14 to 276 kPa)
5 to 160 PSIG (34 to 1103 kPa)
Bleed Rate ..... 0.05 SCFM
Gauge Ports ..... Two Ports 1/4"
(Can be used as additional High Flow 1/4 Inch Outlet Ports)
Maximum Operating Temperature ..... 150°F (65.5°C)
Maximum Supply Pressure ..... 300 PSIG (2068 kPa)
Port Threads .....1-1/2", 2"
Weight .....9 lb. (4.1 kg)

Materials of Construction

Body .....Zinc
Bonnet .....Zinc / Brass
Piston .....Zinc
Seals ..... Nitrile
Springs ..... Steel
Valve Assembly .....Brass / Nitrile / Acetal

Pneumatic Division
Richland, Michigan
www.wattsfluidair.com

R216 Precision Regulators



Features

- High Flow Performance Featuring Rugged Design for the Most Demanding Applications
- Ideal for Those Installations Calling for Constant Pressure with Wide Variation in Flow
- Diaphragm Operated with Large Surface Area and Aspirator for Quick and Precise Regulation
- Heavy Duty Tee Handle Adjustment
- Panel Mount Version Available
- High Flow: 1/4" & 3/8" - 40 SCFM§

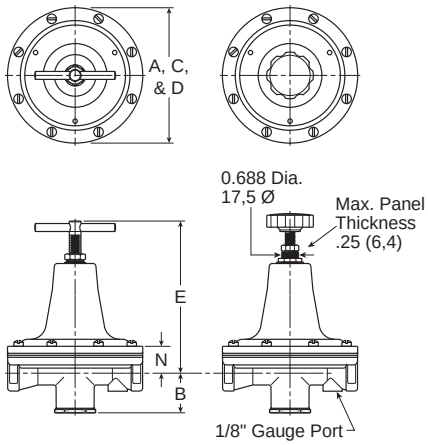

Port Size	NPT Relieving	BSPP Relieving
Tee Handle, Without Gauge 0-20 PSIG Reduced Pressure		
1/4"	**R216-02F**	R216G02F
3/8"	**R216-03F**	R216G03F
Hand Wheel Knob, Without Gauge 0-20 PSIG Reduced Pressure		
1/4"	**R216-02FP**	R216G02FP
3/8"	**R216-03FP**	R216G03FP

Bold Items are Most Popular.
For other models refer to ordering information below.

§ SCFM = Standard cubic feet per minute at 100 PSIG inlet, 75 PSIG no flow secondary setting, and 20 PSIG pressure drop.

R216 Regulator Dimensions					
A	**B**	**C**	**D**	**E**	**N**
R216-02F, R216-03F					
4.25 (108)	1.24 (31.6)	4.25 (108)	4.25 (108)	4.78 (121)	0.85 (21.5)
R216-02FP, R216-03FP					
4.25 (108)	1.24 (31.6)	4.25 (108)	4.25 (108)	4.78 (121)	0.85 (21.5)

inches
(mm)

Ordering Information

R	216	—	02	F		/**

Port Threads
— NPT
G BSPP

Port Size
02 1/4 Inch
03 3/8 Inch

Reduced Pressure Range
E 0-8 PSIG
F 0-20 PSIG
H 0-50 PSIG

Options
K Non-Relieving
P Panel Mount with Knob

Engineering Change Designator
Will be entered at factory.

BOLD ITEMS ARE MOST POPULAR.

Pneumatic Division
Richland, Michigan
www.wattsfluidair.com

B

Technical Information

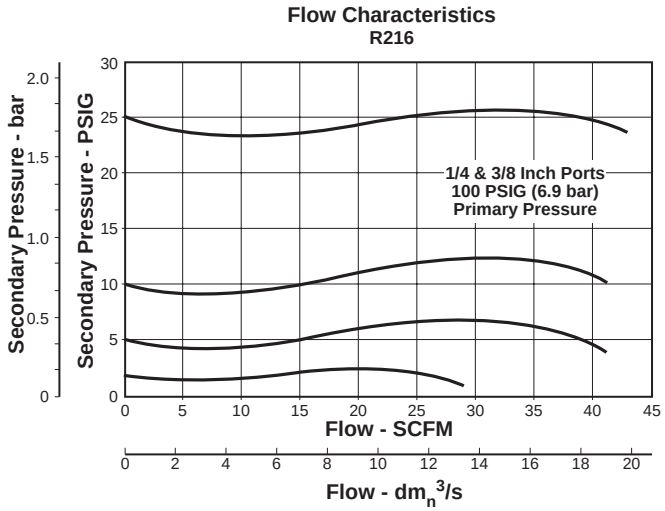

⚠ WARNING

Product rupture can cause serious injury.
Do not connect regulator to bottled gas.
Do not exceed maximum primary pressure rating.

⚠ CAUTION:

REGULATOR PRESSURE ADJUSTMENT – The working range of knob adjustment is designed to permit outlet pressures within their full range. Pressure adjustment beyond this range is also possible because the knob is not a limiting device. This is a common characteristic of most industrial regulators, and limiting devices may be obtained only by special design.
For best performance, regulated pressure should always be set by increasing the pressure up to the desired setting.

R216 Regulator Kits & Accessories

Round Plastic Knob 118Y51

Panel Mount Conversion Kit
(Spring Cage, Knob, Hardware) 4206

Repair Kits –
Non-Relieving Diaphragm,
Valve Assembly (1/4", 3/8") RK216KY

Relieving Diaphragm,
Valve Assembly (1/4", 3/8") RK216Y

Specifications

Gauge Port (1) ..... 1/8 Inch

Port Threads ..... 1/4, 3/8 Inch

Reduced Pressure Range ..... 5 to 20 PSIG (0.03 to 1.4 bar)

Supply Pressure ..... 300 PSIG Maximum (20.4 bar)

Temperature Rating ..... 40°F to 125°F (4.4°C to 52°C)

Weight ..... 2.2 lb. (1.00 kg) / Unit
18 lb. (8.16 kg) / 8-Unit Master Pack

Materials of Construction

Body, Spring Cage ..... Zinc

Bottom Plug ..... Brass

Seals ..... Buna N

R210 / R220 High Precision Regulator

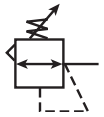



Features

- Accurate Pressure Regulation Controls Output Pressure to within 0.1% Accuracy
- Multi-Stage Regulation for Maximum Control and Stability
- Two Full Flow Gauge Ports
- Super Sensitive Relief. Downstream Pressure Buildup, Down to 0.005 PSIG Above the Set Pressure, is Automatically Vented through Internal Relief Valve
- R220 has High Exhaust Relief Capacity

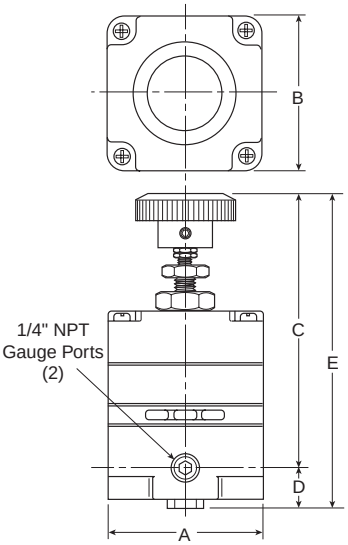

R210 / R220 Regulator Dimensions			
A	**B**	**C**	**D**
2.06 (52)	4.35 (110)	3.82 (97)	0.53 (13.5)

inches (mm)

The R210 / R220 are high precision, multi-stage pressure regulators. This pressure controller provides the highest level of regulation accuracy and repeatability available and is ideal for applications that call for the utmost in control and maximum stability under variable operating conditions.
A stainless steel measuring capsule is used as a sensing element to activate the high gain servo balanced control mechanism in which the main valve is controlled by a pilot valve. This allows for greater accuracy and eliminates many of the problems associated with conventional regulators using range springs and diaphragms.

Applications

The R210 and R220 regulators are well suited for any process that requires very precise regulation of air pressure in pipes and vessels. These regulators are often used, but not limited to the following applications:

- Air Gauging
- Gas Mixing
- Calibration Standards
- Air Hoists
- Web Tensioning
- Gate Actuators
- Roll Loading
- Valve Operators
- Cylinder Loading

Ordering Information

		Reduced Pressure Range (PSIG)		
Relieving		**2 to 40**	**2 to 120**	**2 to 120 High Relief**
In / Out Ports	1/4"	R210-02A	R210-02C	R220-02C

Technical Information

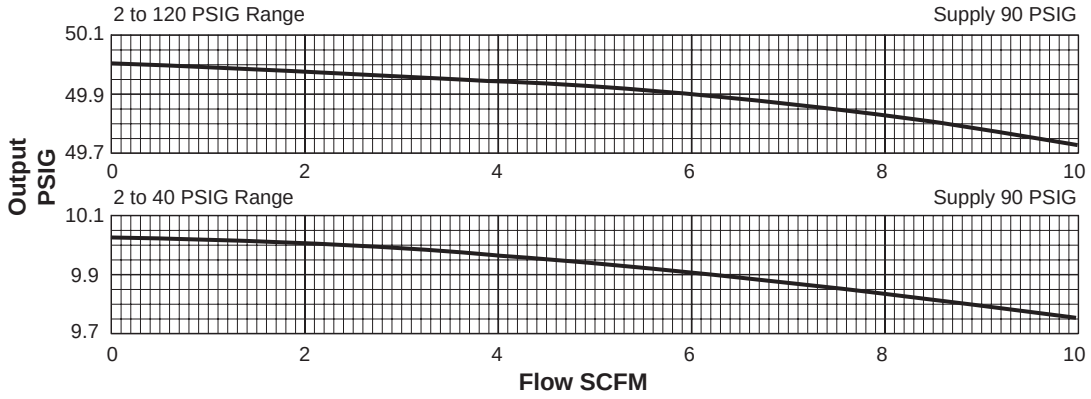

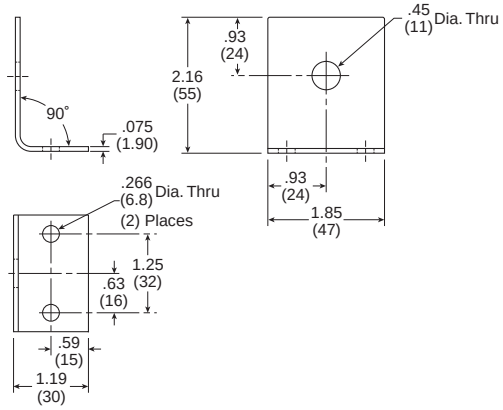

Mounting Bracket: 446-707-045

⚠ WARNING

Product rupture can cause serious injury.
Do not connect regulator to bottled gas.
Do not exceed maximum primary pressure rating.

⚠ CAUTION:

REGULATOR PRESSURE ADJUSTMENT – The working range of knob adjustment is designed to permit outlet pressures within their full range. Pressure adjustment beyond this range is also possible because the knob is not a limiting device. This is a common characteristic of most industrial regulators, and limiting devices may be obtained only by special design.
For best performance, regulated pressure should always be set by increasing the pressure up to the desired setting.

R210 / R220 Regulator Kits & Accessories

Mounting Bracket Kits –
Pipe Mounting (Pair) SA200YW57
Right Angle Mounting 446-707-045

Service Kits –
2-40 PSIG RKR210A*
2-120 PSIG RKR210C*
2-120 PSIG (High Relieving) RKR220C*
* Parts in Kit: Diaphragms, Gasket, Bleed Orifice

Specifications

Constant Bleed Rate .....Less than 0.08 SCFM (0.15m³/hr)
(Equals Bleed Rate plus other consumption)

Total Air Consumption .....6 SCFH (0.21m³/hr.)

Effect of Supply Pressure Variation of 25 PSIG (1.7 bar) on Outlet:
Less than 0.005 PSIG (0.0003 bar)

Exhaust (Relief) Capacity –
At 5 PSIG (0.34 bar) above 20 PSIG (1.38 bar) Setpoint
Standard Model ..... 3 SCFM (3.4m³/hr)
High-Relief Model ..... 11 SCFM (17m³/hr)

Flow Capacity –
At 100 PSIG (6.89 bar) Supply,
20 PSIG (1.38 bar) Outlet..... 14 SCFM (25m³/hr)

Gauge Ports .....1/4" NPTF
(Can be used as additional full flow 1/4" outlet ports)

Operating Pressure Range:		PSIG	bar
PRIMARY – Maximum		150	10.34
SECONDARY – Spring Pressure			
40 PSIG	Minimum	2	0.14
	Maximum	40	2.76
120 PSIG	Minimum	2	0.14
	Maximum	120	8.27

Operating Temperature Range .....-18°C * to 65°C (0°F* to 150°F)
* Temperatures below 0°C (32°F) require moisture free air.

Repeatability / Sensitivity .....0.005 PSIG (0.0003 bar)
Inches of Water Column = 1/8"

Weight ..... 1.4 lb (0.64 kg)

Materials of Construction

Adjusting Stem & Capsule .....Stainless Steel
Body .....Zinc
Control Knob ..... Plastic
Diaphragm(s) .....Buna-N
Seals .....Buna-N
Springs .....Stainless Steel
Valve Poppet .....Stainless Steel

Pneumatic Division
Richland, Michigan
www.wattsfluidair.com

R230 High Flow Precision Regulator



Features

- Adjusting Knob.
- Diaphragm Design for Good Repeatability, Response and Sensitivity
- Balanced Poppet
- Two Full Flow Gauge Ports
- Precise Regulation. Will Sense a Decrease in Downstream Pressure as Small as 1/4" of Water Column (0.010 PSIG)
- High Fow Capacity. Flows of 80 SCFM Attainable with Minimal Drop
- Stable Output. Dampening Action of Aspiration Tube makes Regulator Insensitive to Changes in Flow
- On-line Maintenance. Can be Serviced Without Removal of Air Line

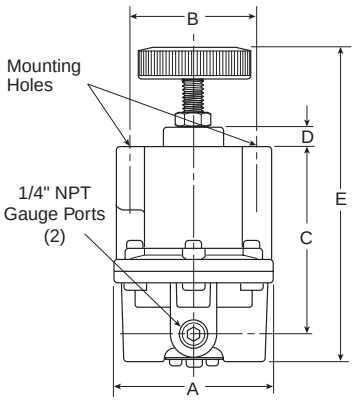

The R230 is designed for applications that require high flow capacity and accurate process control. A poppet valve which is balanced by utilizing a rolling diaphragm, insures a constant output pressure even during wide supply pressure variations. Stability of regulated pressure is maintained under varying flow conditions through the use of an aspirator tube which adjusts the air supply in accordance with the flow velocity.

Applications

The R230 regulators are an ideal choice for any application that calls for accurately maintained output pressure under high flow conditions. This includes, but is not limited to such applications as:

Test Equipment

- Gas Mixing
- Valve Operators
- Positioning Cylinders
- Laboratory Equipment
- Web Tensioning
- Clutch & Brake Controls
- Roll Loading
- Test Panels
- Actuators

R230 Regulator Dimensions

A	B	C	D	E
3.00 (76)	0.38 (10)	3.40 (86)	6.06 (154)	2.25 (57)

inches (mm)

Ordering Information

	Reduced Pressure Range (PSIG)				
Relieving	**Port Size**	**0 to 2**	**0 to 30**	**0 to 60**	**0 to 150**
In / Out Ports	1/4"	R230-02E	R230-02B	R230-02C	R230-02D
	3/8"	N/A	R230-03B	R230-03C	R230-03D

Pneumatic Division
Richland, Michigan
www.wattsfluidair.com

Technical Information

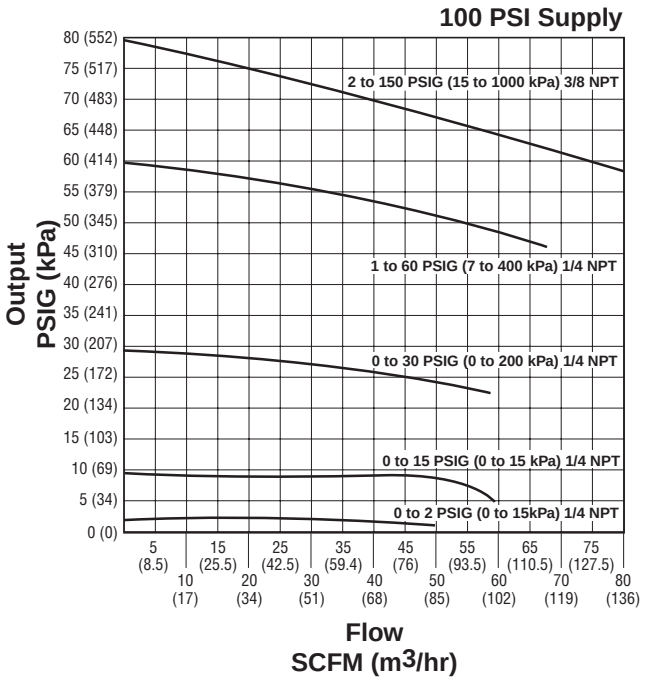

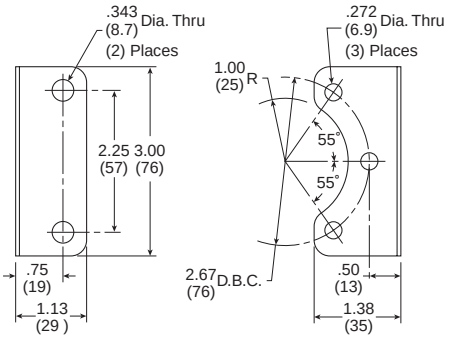

Mounting Bracket: 446-707-025

B

⚠ WARNING

Product rupture can cause serious injury.
Do not connect regulator to bottled gas.
Do not exceed maximum primary pressure rating.

⚠ CAUTION:

REGULATOR PRESSURE ADJUSTMENT – The working range of knob adjustment is designed to permit outlet pressures within their full range. Pressure adjustment beyond this range is also possible because the knob is not a limiting device. This is a common characteristic of most industrial regulators, and limiting devices may be obtained only by special design.
For best performance, regulated pressure should always be set by increasing the pressure up to the desired setting.

R230 Regulator Kits & Accessories

Mounting Bracket Kit 446-707-025

Service Kits – Relieving
- 0 to 2 PSIG RKR230E*
- 0 to 30 PSIG RKR230B*
- 0 to 60 PSIG RKR230C*
- 0 to 150 PSIG RKR230D*

* Parts in Kit: Diaphragm, Poppet, O-ring

Specifications

Constant Bleed Rate ..... 1.0 to 12.5 SCFH
(Depending upon output pressure)

Gauge Ports ..... Two Ports 1/4"
(Can be used as additional Full Flow 1/4 Inch Outlet Ports)

Effect of Supply Pressure Variation –
Less than 0.1 PSIG for 100 PSIG (6.89 bar) change

Exhaust (Relief) Capacity –
4 SCFM with downstream pressure 5 PSIG above set pressure. ...
Exhaust commences at 0.01 PSIG above set pressure.

Flow Capacity –
At 100 PSIG (6.89 bar) Supply,
80 PSIG (5.5 bar) Outlet ..... 80 SCFM (37.8 dm^2/s)

Operating Temperature Range ..... -40°C to 71°C
(-40°F to 160°F)

Operating Pressure Range –	**PSIG**	**bar**
PRIMARY – Maximum	250	17

Port Threads ..... 1/4"

Exhaust (Relief) Capacity ..... 4.0 SCFM
(Downstream pressure 5 PSI above set pressure)

Repeatability / Sensitivity ..... ±0.010 PSIG (±0.00068 bar)
Inches of Water Column = 1/4"

Response ..... 250 ms
The valve will open to full flow and fill a volume of 1250 cm^3

Weight ..... 1 lb. 10 oz. (0.74 kg)

Materials of Construction

Adjusting Stem & Spring ..... Steel

Biased Spring ..... Stainless Steel

Body, Bonnet ..... Aluminum

Control Knob ..... Plastic

Diaphragm ..... Buna-N Elastomer and Polyester Fabric

Seals ..... Buna-N

Valve Poppet ..... Brass

Valve Poppet Seat ..... Buna-N

Pneumatic Division
Richland, Michigan
www.wattsfluidair.com

P3HP Electronic Proportional Regulator

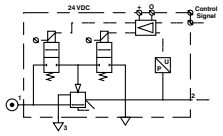



Features

- Low Watt Power Consumption
- High Visibility LED Display
- User Friendly and Easily Accessible Software
- Special Applications
- Compact and Light Weight
- Flexible Mounting Options
- 0 to 10V Control Signal, Adjustable to 4-20mA via Touch Pad Control

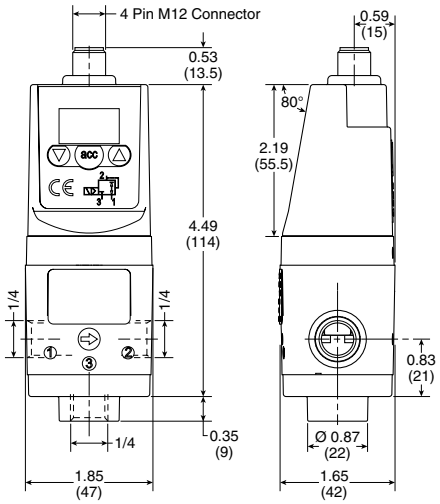

Foot Bracket

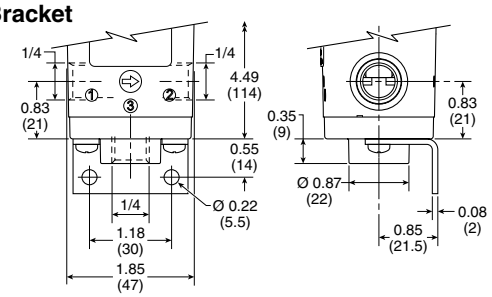

DIN Rail

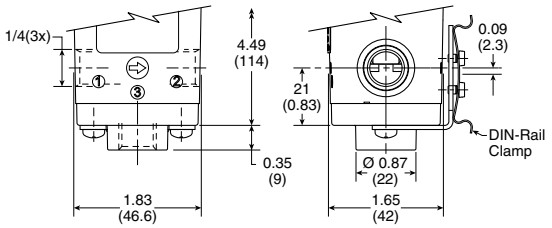

Ordering Information

P3HPA	9	2	A	D	2	V	D	1	A

Port Type
- 1* G Thread (BSP) Female
- 9 NPT Female

* Available on Request

Port Size
- 2 1/4

Version
- A Bottom Exhaust

Pressure Range
- Z 0-2 bar (0-29 PSI)
- D 0-10 bar (0-145 PSI)

Power Supply
- 2 24 Volts

Control Signal
- V 0-10 V *

* Factory setting is 0-10 V control signal. 4-20 mA control signal available via parameter 4 on keypad.

Output
- D Digital, PNP
- M 4 to 20 mA Fixed
- N* NPN or 0 to 10V
- P* PNP or 0 to 10V

* Selectably by means of parameter 6.

Input Connector
- 1 M12 (4-Pin)

Pneumatic Division
Richland, Michigan
www.wattsfluidair.com

Technical Information

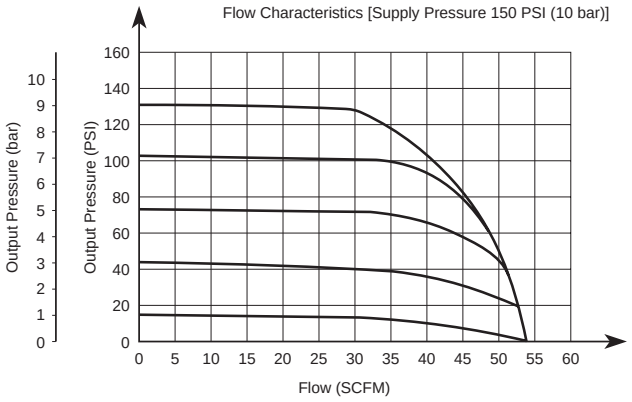

Accessories

Cable (M12, 4-pin connection w/2m cable) CB-M12-4P-2M
DIN Rail Mounting Kit P3HKA00MK
Foot Bracket Mounting Kit P3HKA00MF
Seal Kit (valve seat, cover seal) 3538200
Valve Kit (2 valves, screws, cover seal) 3538100

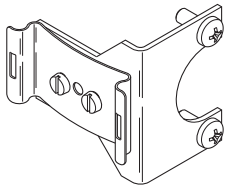

DIN Rail

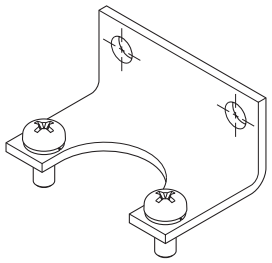

Foot Bracket

B

Parameters

P00	P04	P09	P 14	P 18	P 19	P20	P 12	P 13	P21	P39
Reset Back to Factory Settings	Set Control Signal in Volts or Milliamps	Adjust Digital Display Value (Pressure Calibration)	Set Pressure Scale in PSI or bar	Set Minimum Preset Pressure	Set Maximum Preset Pressure	Set Behavior Control	Set Proportional Band	Set Deadband	Set Proportional Effect	Displays Current Software Version

For Parameter Adjustment Details, refer to Instruction Sheet 2R210.

Specifications

Flow Capacity*
1/4 ..... 35 SCFM (16.5 dm^3/s)
Accuracy Linearity ..... =< 0.3% F.S.*
Current Consumption ..... Max. 200 mA with No Load
Dead Band – Preset at 1.3% F.S.*, adjustable via parameter 13.
Degree of Protection IP65
Maximum Operating Pressure –
2 bar Unit ..... 3 bar (43.5 PSI)
10 bar Unit ..... 10.5 bar (152 PSI)
Minimum Operating Pressure ..... P2 Pressure + 0.5 bar (7.3 PSI)
Power Consumption ..... 1.1 W
Supply Voltage ..... 24 VDC +/- 10%
Temperature Range ..... 32°F to 122°F (0°C to 50°C)
Weight ..... 10 oz.
* Inlet pressure 150 PSIG (10.3 bar). Pressure drop 5 PSID (0.3 bar)

Materials of Construction

Core Housing ..... Brass
Magnet Core ..... Steel
Regulator Housing ..... Techno Polymer
Remaining Seals ..... NBR
Seats and Auxiliary Piston ..... Delrin, Brass
Solenoid Valve Poppet ..... FPM
Solenoid Valve Housing ..... Techno Polymer
Port Connections –
Standard Version ..... Brass
Food ..... Stainless Steel
Valve ..... Polyurethane

Pneumatic Division
Richland, Michigan
www.wattsfluidair.com

Lubricators

Lubrication

Many pneumatic system components and most pneumatic tools require oil lubrication for proper operation and long service life. This lubricant is typically carried by the air stream. Too little oil can cause excessive wear and premature failure. Too much oil is wasteful and can become a contaminant, particularly when carried over with the air exhaust. Intermittent lubrication may be the worst situation because the oil film can dry out to form sludges and varnishes on internal surfaces.

Air line lubricators meter oil from a reservoir into the moving air stream. In general terminology, the oil droplets are usually termed a fog. For best results, the lubricator should be located as close as possible to the point where lubrication is required.

How to Select the Proper Lubricator

Use of proper lubricator can greatly extend the life of expensive downstream pneumatic equipment. Lubricators often are selected according to pipe size. Other selection factors are type of bowl material, bowl size, and refilling system capability. Bowls are available in both polycarbonate and metal. Polycarbonate offers the advantage or transparency, for simplified inspection of oil level and condition. However, caution must be exercised when using polycarbonate bowls in any area where certain chemicals are used. (Please read the warning carefully.)

In addition to choice of bowls, minimum and maximum flow rates and pressure requirements should also be considered. Be sure to check the pressure drop curves, to make certain the selected model will not create a higher pressure drop than the system design can tolerate.

Lubricator Construction

Bowls are available in polycarbonate and metal, subject to the same constraints discussed in the Filter Section. Transparent polycarbonate simplifies inspection of the oil level and checking for dirt and liquid condensate in the oil. Note that the system must be exhausted before removing the bowl.

In some models, the system must also be exhausted before opening the fill plug to recharge the lubricator. Other designs automatically bypass the air during refilling.

⚠ Warning

The plastic material used to manufacture the plastic bowls, and the sight gauge on metal bowls, may be attacked by certain chemicals. Do not use this lubricator on systems with air supplied by a compressor lubricated with synthetic oils or oils containing phosphate esters or chlorinated hydrocarbons. These oils can carry over into the air lines and chemically attack and possibly rupture the bowl or sight gauge. Also, do not expose the bowls or sight gauge to materials such as carbon tetrachloride, trichlorethylene, acetone, paint thinner, cleaning fluids, or other harmful materials, for they too will cause the plastic to craze and/or rupture. For use in environments where these, or any, chemicals may be present, consult the factory for approval.

Lubricator Installation

The lubricators listed in this catalog should be placed before any valving and stay pressurized before, during, and after machine tool cycles. These lubricators should be placed no farther away than 15 feet from the desired point of lubrication.

Lubricators

Lubrication Operation

Most lubricator designs include a high-velocity venturi section in the air flow path which creates a low-pressure area to draw oil from the reservoir through a capillary tube to the point of injection. There, the air stream breaks up the oil into droplets.

In a typical lubricator, filtered and regulated air enters the lubricator housing and is channeled in either of two directions depending on flow rate. At low flow rates, all the air passes through the venturi where it mixes with metered oil droplets. Under higher flow conditions, the spring-loaded bypass valve opens and the excess flow bypasses the venturi, then blends with the lubricated air at a downstream point. A manual adjustment (needle valve) in the housing sets the oil drip-rate into the air stream; a sight gauge allows that rate to be monitored. Fill plugs at the lubricator top provide access to refill the reservoir with oil. The bowl is removable for cleaning.

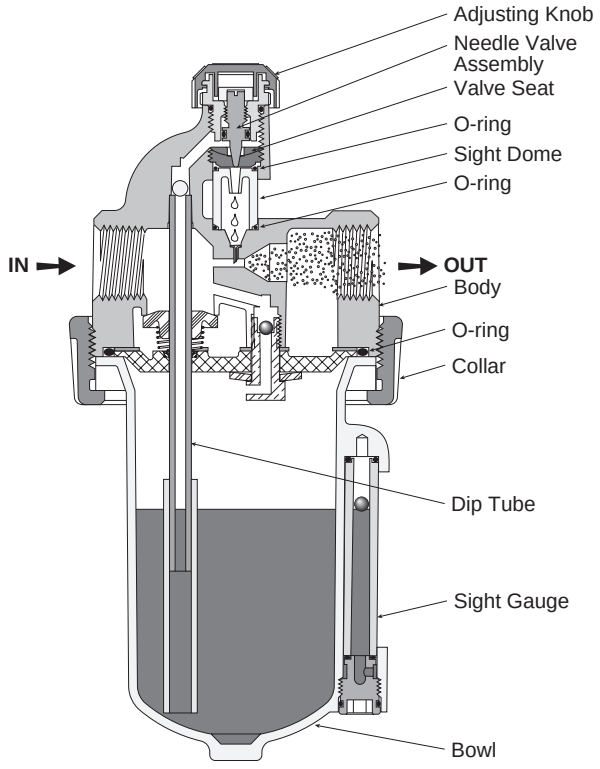

L606 General Purpose Lubricators

B



Features

- Metal Bowl with Sight Gauge & Drain - Standard
- Polycarbonate Sight Dome
- Bowl can be Filled while Air Line is Under Pressure
- Proportional Oil Delivery Over a Wide Range of Air Flows
- Large Capacity Bowl
- Precision Needle Valve Assures Repeatable Oil Delivery and Provides Simple Adjustment of Delivery Rate
- High Flow: 1/4" - 45 SCFM§
  3/8" - 72 SCFM§

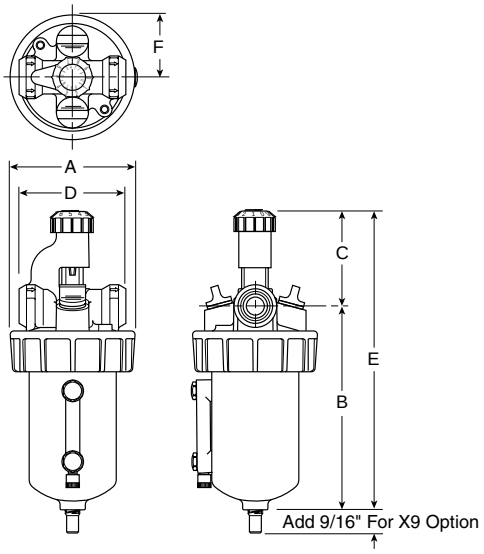

Port Size	NPT No Drain	BSPP No Drain
Polycarbonate Bowl* / Plastic Guard		
1/4"	**L606-02B**	L606G02B
3/8"	**L606-03B**	L606G03B
Metal Bowl / Sight Gauge		
1/4"	**L606-02W**	L606G02W
3/8"	**L606-03W**	L606G03W

Bold Items are Most Popular.
For other models refer to ordering information below.

*** For polycarbonate bowl see Caution on page B2.**

§ SCFM = Standard cubic feet per minute at 100 PSIG inlet, and 5 PSIG pressure drop.

L606 Lubricator Dimensions					
A	**B**	**C**	**D**	**E**	**F**
L606-02B, L606-03B					
2.98 (76)	4.76 (121)	2.22 (56)	2.50 (64)	6.98 (177)	1.49 (381)
L606-02W, L606-03W					
2.98 (76)	5.32 (135)	2.22 (56)	2.50 (64)	7.54 (192)	1.49 (38)

inches
(mm)

Ordering Information

L	606	—	02	W		/**

Port Threads
— NPT
G BSPP

Port Size
02 1/4 Inch
03 3/8 Inch

Bowl
B Polycarbonate with Plastic Bowl Guard - 5 oz.
W Metal with Sight Gauge - 5 oz. with Drain

Options
H Button Head Fill Fitting
X9* Manual Twist Drain on Plastic Bowl (Increases Product Length by 9/16 Inch)

* Standard with "W" Bowl. Optional with "B" Bowl.

Engineering Change Designator
Will be entered at factory.

BOLD ITEMS ARE MOST POPULAR.

Pneumatic Division
Richland, Michigan
www.wattsfluidair.com

Technical Information

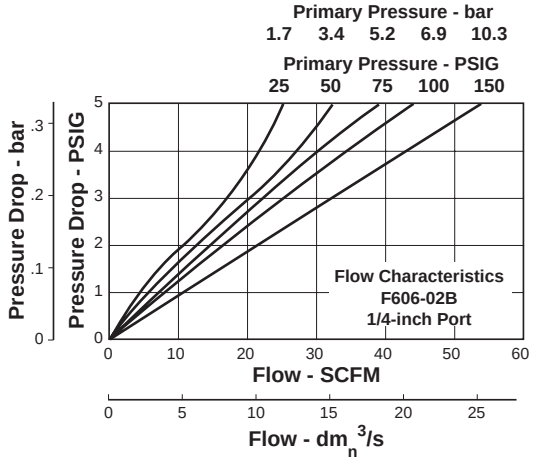

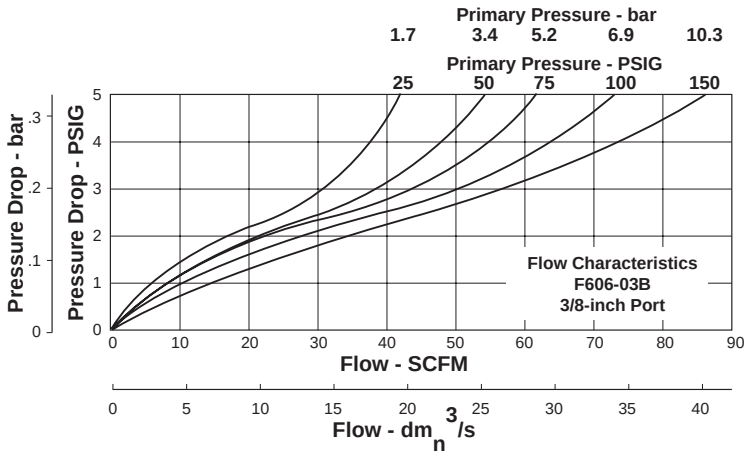

B

L606 Lubricator Kits & Accessories

Adjusting Knob 606Y72

Bowl Kits –
Polycarbonate with Plastic Bowl Guard (B) BK606Y
Zinc with Sight Gauge (W) BK605WY

Button Head Fill Fitting (M14 male thread) L606C14

Dip Tube Kit DTK606

Drip Spout Kit RK606SY

Mounting Bracket SAF602-0571

Repair Kits –
Needle Valve Assembly (B,W) RK606Y
Sight Gauge for "W" Bowl RKB605WY

Specifications

Bowl Capacity ..... 5 Ounces

Port Threads ..... 1/4, 3/8 Inch

Pressure & Temperature Ratings –
Polycarbonate Bowl ..... 0 to 150 PSIG (0 to 10.2 bar)
40°F to 125°F (4.4°C to 52°C)
Metal Bowl ..... 0 to 250 PSIG (0 to 17.2 bar)
40°F to 150°F (4.4°C to 65.6°C)

Weight –
Polycarbonate Bowl ..... 1.8 lb. (0.82 kg) / Unit
15 lb. (6.80 kg) / 8-Unit Master Pack
Metal Bowl ..... 2.2 lb. (1.00 kg) / Unit
17.6 lb. (7.98 kg) / 8-Unit Master Pack

Materials of Construction

Body ..... Zinc

Bowls –
Polycarbonate ..... Polycarbonate with Polyethylene Guard
Metal ..... Zinc with Polyurethane Sight Gauge

Drain ..... Brass

Seals ..... Buna N

Sight Gauge ..... Nylon

L606 General Purpose Lubricators

B



Features

- Metal Bowl with Sight Gauge & Drain - Standard
- Polycarbonate Sight Dome
- Bowl can be Filled while Air Line is Under Pressure
- Proportional Oil Delivery Over a Wide Range of Air Flows
- Large Capacity Bowl
- Optional High Capacity Bowl(s) Available
- Precision Needle Valve Assures Repeatable Oil Delivery and Provides Simple Adjustment of Delivery Rate
- High Flow: 1/2" - 110 SCFM§

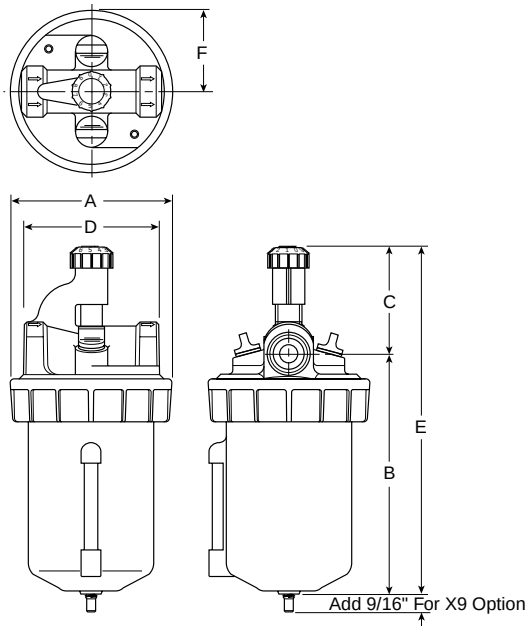

Port Size	NPT No Drain	BSPP No Drain
Polycarbonate Bowl* / Plastic Guard		
1/2"	**L606-04B**	L606G04B
Zinc Bowl / Sight Gauge		
1/2"	**L606-04W**	L606G04W
Aluminum Bowl 16 oz. without Sight Gauge		
1/2"	**L606-04E**	L606G04E
Aluminum Bowl 64 oz. with Sight Gauge		
1/2"	**L606-04G**	L606G04G

Bold Items are Most Popular.
For other models refer to ordering information below.

*** For polycarbonate bowl see Caution on page B2.**

§ SCFM = Standard cubic feet per minute at 100 PSIG inlet, and 5 PSIG pressure drop.

L606 Lubricator Dimensions					
A	**B**	**C**	**D**	**E**	**F**
L606-04B					
3.78 (96)	5.44 (138)	2.31 (59)	3.25 (83)	7.75 (197)	1.89 (197)
L606-04W					
3.78 (96)	6.19 (157)	2.31 (59)	3.25 (83)	7.94 (216)	1.89 (48)
L606-04E					
3.78 (96)	9.38 (238)	2.31 (59)	3.25 (83)	11.69 (297)	1.89 (48)
L606-04G					
5.00 (127)	9.57 (243)	2.49 (63)	5.96 (151)	12.05 (306)	2.50 (64)

inches
(mm)

Ordering Information

L	606	—	04	W		/**

Port Threads
— NPT
G BSPP

Port Size
04 1/2 Inch

Bowl	Capacity	Description	Size
B	8 oz.	Polycarbonate with Plastic Bowl Guard	1/2"
E	16 oz.	Large Capacity without Sight Gauge, with Drain	1/2"
G	64 oz.	Large Capacity with Sight Gauge	1/2"
W	**8 oz.**	**Metal with Sight Gauge & Drain**	**1/2"**

Options
H Button Head Fill Fitting
X9* Manual Twist Drain on Plastic Bowl (Increases Product Length by 9/16 Inch)

* Standard with "E" & "W" Bowl. Optional with "B" & "G" Bowl.

Engineering Change Designator
Will be entered at factory.

BOLD ITEMS ARE MOST POPULAR.

Pneumatic Division
Richland, Michigan
www.wattsfluidair.com

Technical Information

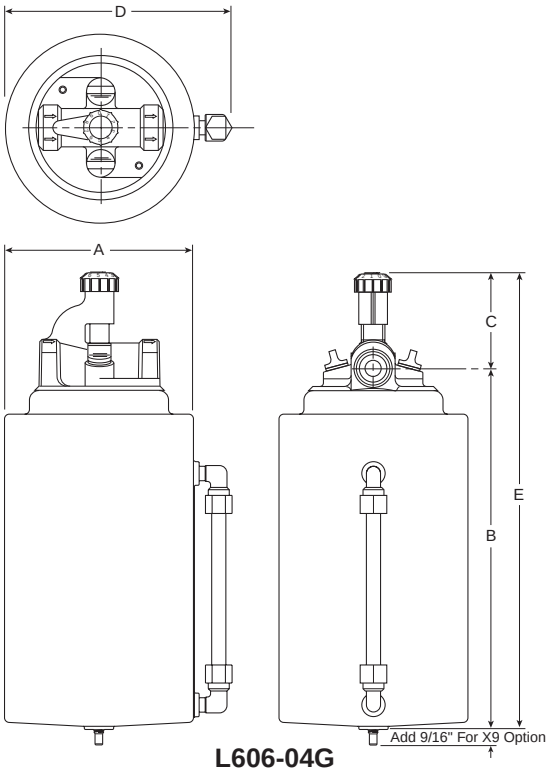

L606-04G

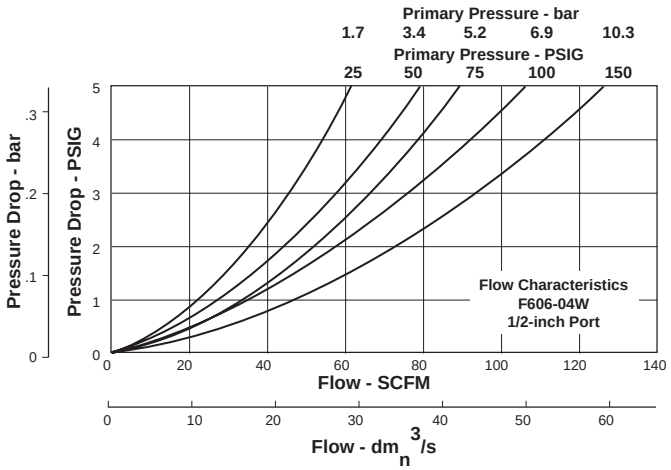

B

L606 Lubricator Kits & Accessories

Adjusting Knob 606Y72

Bowl Kits –
- Aluminum (E) BK603A
- Aluminum with Sight Gauge (G) BK606X30A
- Polycarbonate with Plastic Bowl Guard (B) BK606A
- Zinc with Sight Gauge (W) BK605WA

Button Head Fill Fitting (M14 male thread) L606C14

Dip Tube Kit DTK606

Drip Spout Kit RK606SY

Mounting Bracket SAF602-0572

Repair Kits –
- Adjusting Knob (All) 606Y72
- Needle Valve Assembly (All) RK606Y
- Sight Gauge Bowl Repair Kit (W) RKB605WA
- Sight Gauge Bowl Repair Kit (G) RKB606X30A

Specifications

Bowl Capacity –
- Aluminum (E) ..... 16 Ounces
- Aluminum with Polycarbonate Sight Gauge (G) ..... 64 Ounces
- Polycarbonate with Polyurethane Bowl Guard (B) ..... 8 Ounces
- Zinc with Nylon Sight Gauge (W) ..... 8 Ounces

Port Threads ..... 1/2 Inch

Pressure & Temperature Ratings –

Aluminum Bowl (E) ..... 0 to 300 PSIG (0 to 20.4 bar)
40°F to 150°F (4.4°C to 65.6°C)

Aluminum Bowl with
Polycarbonate Sight Gauge (G) ..... 0 to 150 PSIG (0 to 10.2 bar)
40°F to 125°F (4.4°C to 52°C)

Polycarbonate Bowl with
Polyurethane Bowl Guard (B) ..... 0 to 150 PSIG (0 to 10.2 bar)
40°F to 125°F (4.4°C to 52°C)

Zinc Bowl with
Nylon Sight Gauge (W) ..... 0 to 250 PSIG (0 to 17.2 bar)
40°F to 150°F (4.4°C to 65.6°C)

Weight –

Aluminum Bowl (E) ..... 3.5 lb. (1.59 kg) / Unit
27.8 lb. (12.61 kg) / 8-Unit Master Pack

Aluminum Bowl with
Polycarbonate Sight Gauge (G) ..... 6.9 lb. (3.13 kg) / Unit
27.6 lb. (12.52 kg) / 4-Unit Master Pack

Polycarbonate Bowl with
Polyurethane Bowl Guard (B) ..... 2.5 lb. (1.13 kg) / Unit
20.3 lb. (9.21 kg) / 8-Unit Master Pack

Zinc Bowl with Nylon Sight Gauge (W) ..... 3.3 lb. (1.50 kg) / Unit
26.4 lb. (11.97 kg) / 8-Unit Master Pack

Materials of Construction

Body ..... Zinc

Bowls –
- (B) ..... Polycarbonate with Polyurethane Guard
- (E) ..... Aluminum
- (G) ..... Aluminum with Polycarbonate Sight Gauge
- (W) ..... Zinc with Nylon Sight Gauge

Seals ..... Buna N

L606 Standard Lubricators



Features

- Metal Bowl with Sight Gauge & Drain - Standard
- Polycarbonate Sight Dome
- Bowl can be Filled while Air Line is Under Pressure
- Proportional Oil Delivery Over a Wide Range of Air Flows
- Large Capacity Bowl
- Optional High Capacity Bowl(s) Available
- Precision Needle Valve Assures Repeatable Oil Delivery and Provides Simple Adjustment of Delivery Rate
- High Flow: 3/4" - 325 SCFM§
  1" - 350 SCFM§

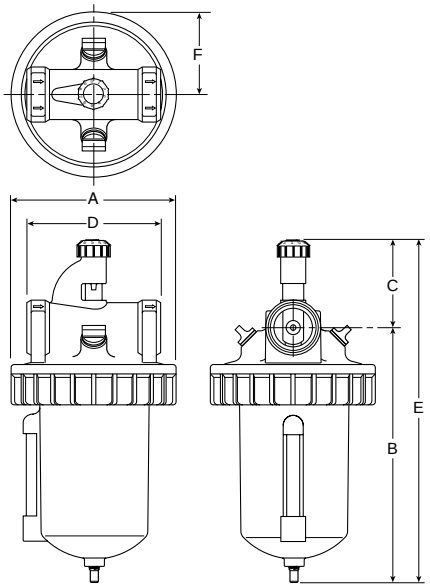

Port Size	NPT No Drain	BSPP No Drain
Zinc Bowl / Sight Gauge		
3/4"	**L606-06W**	L606G06W
1"	**L606-08W**	L606G08W
Aluminum Bowl 32 oz. without Sight Gauge		
3/4"	**L606-06E**	L606G06E
1"	**L606-08E**	L606G08E
Aluminum Bowl 64 oz. with Sight Gauge		
3/4"	**L606-06G**	L606G06G
1"	**L606-08G**	L606G08G

Bold Items are Most Popular.
For other models refer to ordering information below.

§ SCFM = Standard cubic feet per minute at 100 PSIG inlet, and 5 PSIG pressure drop.

L606 Lubricator Dimensions					
A	**B**	**C**	**D**	**E**	**F**
L606-06W, L606-08W					
4.97 (126)	7.25 (198)	2.63 (66.7)	4.06 (103)	11.44 (291)	2.48 (63.1)
L606-06E, L606-08E					
4.97 (126)	10.75 (273)	2.63 (66.7)	4.06 (103)	13.38 (340)	2.48 (63.1)
L606-06G, L606-08G					
5.00 (127)	9.40 (239)	2.62 (66)	4.06 (103)	12.02 (305)	2.50 (64)

inches
(mm)

Ordering Information

L	606	—	06	W		/**

Port Threads
— NPT
G BSPP

Port Size
06 3/4 Inch
08 1 Inch

Bowl			
Bowl	**Capacity**	**Description**	**Size**
E	32 oz.	Large Capacity without Sight Gauge with Drain	3/4" & 1"
G	64 oz.	Large Capacity with Sight Gauge	3/4" & 1"
W	**16 oz.**	**Metal with Sight Gauge & Drain**	**3/4" & 1"**

Options	
H	Button Head Fill Fitting
X9*	Manual Twist Drain on Plastic Bowl (Increases Product Length by 9/16 Inch)

* Standard with "E" & "W" Bowl. Optional with "B" & "G" Bowl.

Engineering Change Designator
Will be entered at factory.

BOLD ITEMS ARE MOST POPULAR.

Pneumatic Division
Richland, Michigan
www.wattsfluidair.com

Technical Information

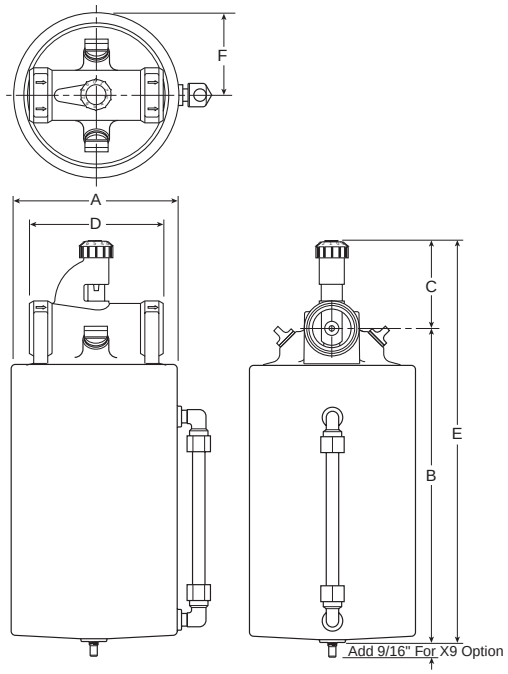

L606-08G

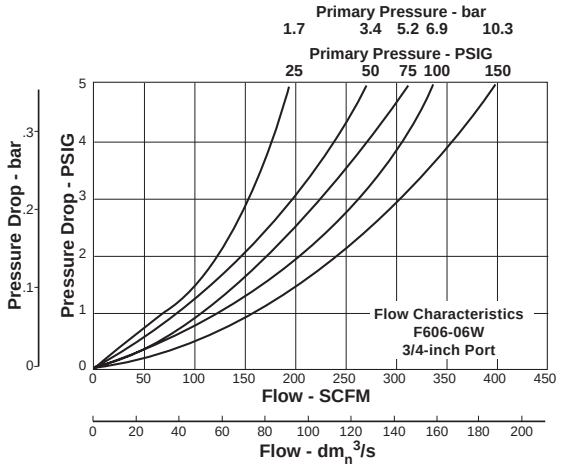

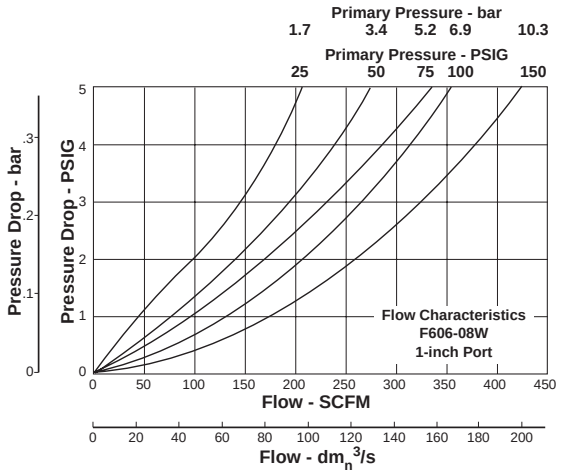

L606 Lubricator Kits & Accessories

Adjusting Knob 606Y72

Bowl Kits –
- Aluminum (E) BK603B
- Aluminum with Sight Gauge (G) BK606X30B
- Zinc with Sight Gauge (W) BK605WB

Button Head Fill Fitting (M14 male thread) L606C14

Dip Tube Kit DTK606

Drip Spout Kit RK606SY

Mounting Bracket –
- 3/4 Inch units (2 required per unit) SA200AW57
- 1 Inch units (2 required per unit) SA200CW57

Repair Kits –
- Needle Valve Assembly (All) RK606Y
- Sight Gauge Bowl Repair Kit (W) RKB605WB
- Sight Gauge Bowl Repair Kit (G) RKB606X30B

Specifications

Bowl Capacity –
- Aluminum (E) ..... 32 Ounces
- Aluminum with Polycarbonate Sight Gauge (G) ..... 64 Ounces
- Zinc with Nylon Sight Gauge (W) ..... 16 Ounces

Port Threads ..... 3/4, 1 Inch

Pressure & Temperature Ratings –

Aluminum Bowl (E) ..... 0 to 300 PSIG (0 to 20.4 bar)
40°F to 150°F (4.4°C to 65.6°C)

Aluminum Bowl with
Polycarbonate Sight Gauge (G) ..... 0 to 150 PSIG (0 to 10.2 bar)
40°F to 125°F (4.4°C to 52°C)

Zinc Bowl with
Nylon Sight Gauge (W)..... 0 to 250 PSIG (0 to 17.2 bar)
40°F to 150°F (4.4°C to 65.6°C)

Weight –

Aluminum Bowl (E) ..... 5.5 lb. (2.49 kg) / Unit
22.3 lb. (10.12 kg) / 4-Unit Master Pack

Aluminum Bowl with
Polycarbonate Sight Gauge (G) ..... 7.2 lb. (3.27 kg) / Unit
28.8 lb. (13.06 kg) / 4-Unit Master Pack

Zinc Bowl with
Nylon Sight Gauge (W)..... 4.2 lb. (1.91 kg) / Unit
16.6 lb. (7.53 kg) / 4-Unit Master Pack

Materials of Construction

Body ..... Zinc

Bowls –
- (E) ..... Aluminum
- (G) ..... Aluminum with Polycarbonate Sight Gauge
- (W) ..... Zinc with Nylon Sight Gauge

Seals ..... Buna N

L606 Standard Lubricators

B



Features

- Metal Bowl with Sight Gauge - Standard
- Polycarbonate Sight Dome
- Bowl can be Filled while Air Line is Under Pressure
- Proportional Oil Delivery Over a Wide Range of Air Flows
- Large Capacity Bowl
- Optional High Capacity Bowl(s) Available
- Precision Needle Valve Assures Repeatable Oil Delivery and Provides Simple Adjustment of Delivery Rate
- High Flow: 1-1/4" - 325 SCFM§
  1-1/2" - 400 SCFM§

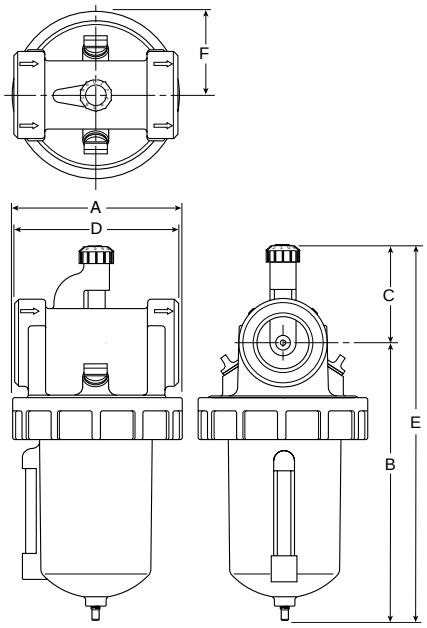

Port Size	NPT No Drain	BSPP No Drain
Zinc Bowl / Sight Gauge		
1-1/4"	**L606-10W**	L606G10W
1-1/2"	**L606-12W**	L606G12W
Aluminum Bowl 32 oz. without Sight Gauge		
1-1/4"	**L606-10E**	L606G10E
1-1/2"	**L606-12E**	L606G12E
Aluminum Bowl 64 oz. with Sight Gauge		
1-1/4"	**L606-10G**	L606G10G
1-1/2"	**L606-12G**	L606G12G

Bold Items are Most Popular.
For other models refer to ordering information below.

§ SCFM = Standard cubic feet per minute at 100 PSIG inlet, and 5 PSIG pressure drop.

L606 Lubricator Dimensions					
A	**B**	**C**	**D**	**E**	**F**
L606-10W, L606-12W					
4.97 (126)	8.19 (208)	2.84 (72.2)	4.81 (122)	11.03 (280)	2.48 (63.1)
L606-10E, L606-12E					
4.97 (126)	11.13 (283)	2.84 (72.2)	4.81 (122)	13.97 (255)	2.48 (63.1)
L606-10G, L606-12G					
5.00 (127)	7.99 (203)	2.84 (72.2)	4.81 (122)	12.80 (325)	2.50 (64)

inches
(mm)

Ordering Information

L	606	—	10	W	H	/**

Port Threads
— NPT
G BSPP

Port Size
10 1-1/4 Inch
12 1-1/2 Inch

Bowl			
Bowl	**Capacity**	**Description**	**Size**
E	32 oz.	Large Capacity without Sight Gauge with Drain	1-1/4" & 1-1/2"
G	64 oz.	Large Capacity with Sight Gauge	1-1/4" & 1-1/2"
W	**16 oz.**	**Metal with Sight Gauge & Drain**	**1-1/4" & 1-1/2"**

Options	
H	Button Head Fill Fitting
X9*	Manual Twist Drain on Plastic Bowl (Increases Product Length by 9/16 Inch)

* Standard with "E" & "W" Bowl. Optional with "B" & "G" Bowl.

Engineering Change Designator
Will be entered at factory.

BOLD ITEMS ARE MOST POPULAR.

Pneumatic Division
Richland, Michigan
www.wattsfluidair.com

Technical Information

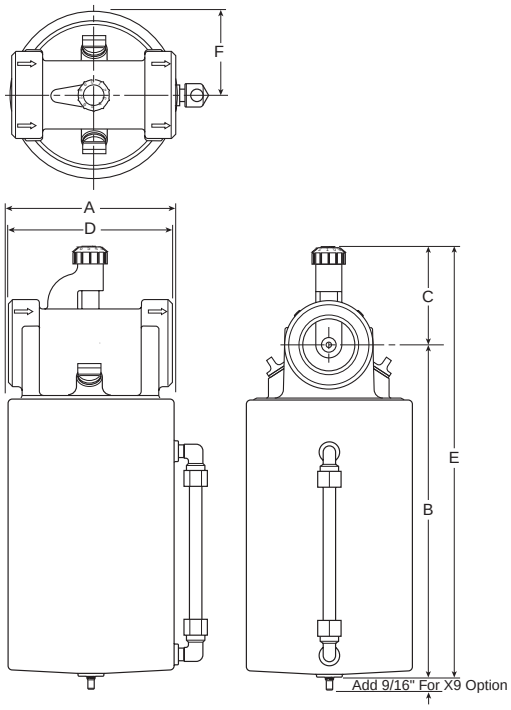

L606-12G

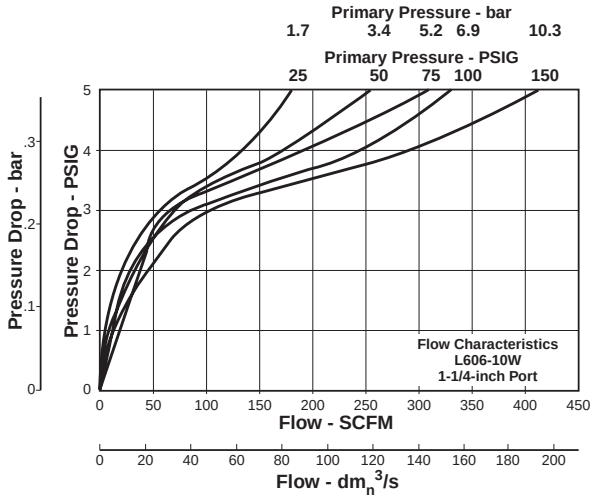

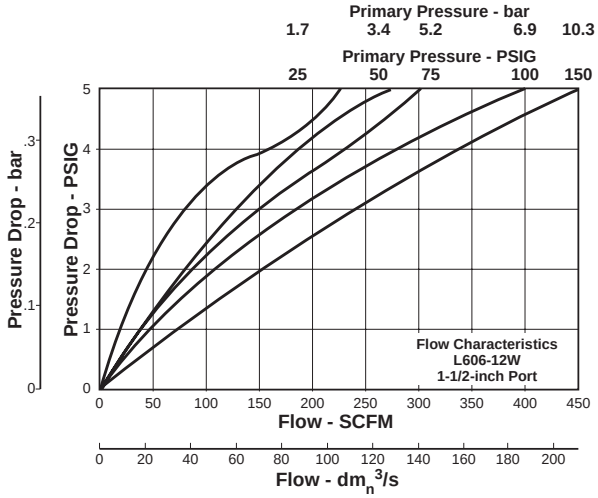

L606 Lubricator Kits & Accessories

Adjusting Knob 606Y72

Bowl Kits –
- Aluminum (E) BK603B
- Aluminum with Sight Gauge (G) BK606X30B
- Zinc with Sight Gauge (W) BK605WB

Button Head Fill Fitting (M14 male thread) L606C14

Dip Tube Kit DTK606

Drip Spout Kit RK606SY

Repair Kits –
- Needle Valve Assembly (All) RK606Y
- Sight Gauge Bowl Repair Kit (W) RKB605WB
- Sight Gauge Bowl Repair Kit (G) RKB606X30B

Specifications

Bowl Capacity –
- Aluminum (E) ..... 32 Ounces
- Aluminum with Polycarbonate Sight Gauge (G) ..... 64 Ounces
- Zinc with Nylon Sight Gauge (W) ..... 16 Ounces

Port Threads ..... 1-1/4, 1-1/2 Inch

Pressure & Temperature Ratings –

Aluminum Bowl (E) ..... 0 to 300 PSIG (0 to 20.4 bar)
40°F to 150°F (4.4°C to 65.6°C)

Aluminum Bowl with
Polycarbonate Sight Gauge (G) ..... 0 to 150 PSIG (0 to 10.2 bar)
40°F to 125°F (4.4°C to 52°C)

Zinc Bowl with
Nylon Sight Gauge (W) ..... 0 to 250 PSIG (0 to 17.2 bar)
40°F to 150°F (4.4°C to 65.6°C)

Weight –

Aluminum Bowl (E) ..... 8.3 lb. (3.76 kg) / Unit
33.2 lb. (15.06 kg) / 4-Unit Master Pack

Aluminum Bowl with
Polycarbonate Sight Gauge (G) ..... 10 lb. (4.54 kg) / Unit
40 lb. (18.14 kg) / 4-Unit Master Pack Zinc Bowl with

Nylon Sight Gauge (W) ..... 7.5 lb. (3.40 kg) / Unit
28.2 lb. (12.79 kg) / 4-Unit Master Pack

Materials of Construction

Body ..... Zinc

Bowls –
- (E) ..... Aluminum
- (G) ..... Aluminum with Polycarbonate Sight Gauge
- (W) ..... Zinc with Nylon Sight Gauge

Seals ..... Buna N

Pneumatic Division
Richland, Michigan
www.wattsfluidair.com

09L Mist Lubricators – Hi-Flow

B



Features

- Metal Bowl with Sight Gauge and Manual Drain – Standard
- Polycarbonate Sight Dome for 360° Visibility
- Bowl can be Filled while Air Line is Under Pressure
- Proportional Oil Delivery Over a Wide Range Of Air Flows
- High Flow: 1000 SCFM[§]

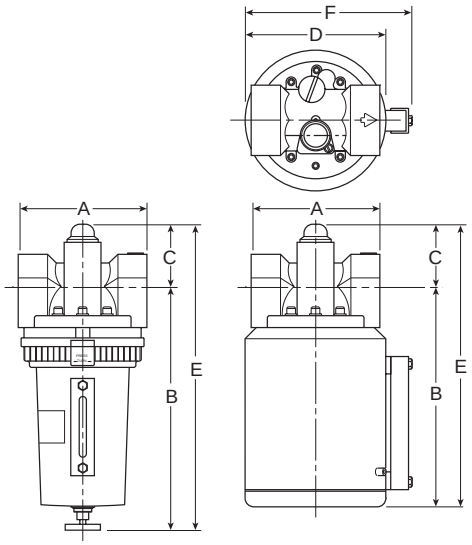

Port Size	NPT
Metal Bowl / Sight Gauge – 1 Quart	
2"	**09L84BA**
Metal Bowl / Sight Gauge – 3 Quart	
2"	**09L8PBA**

Bold Items are Most Popular.
For other models refer to ordering information below.

[§] SCFM = Standard cubic feet per minute at 90 PSIG inlet and 5 PSIG pressure drop.

09L Lubricator Dimensions					
A	**B**	**C**	**D**	**E**	**F**
1 Qt.					
5.50 (140)	10.40 (264)	2.64 (67)	—	13.04 (331)	—
3 Qt.					
5.50 (140)	9.44 (240)	2.64 (67)	6.00 (152)	12.08 (307)	7.12 (181)

Inches
(mm)

Ordering Information

09L	8	4	B	A	

Port Size
8 2 Inch

Bowl Options
Metal Bowl
4 1 Quart Sight Gauge / Manual Twist Drain
P 3 Quart Sight Gauge / Manual Twist Drain

Options
B Without Tamperproof Cap

Engineering Level
A Current

Thread Type
Blank NPT

BOLD ITEMS ARE MOST POPULAR.

Pneumatic Division
Richland, Michigan
www.wattsfluidair.com

Technical Information

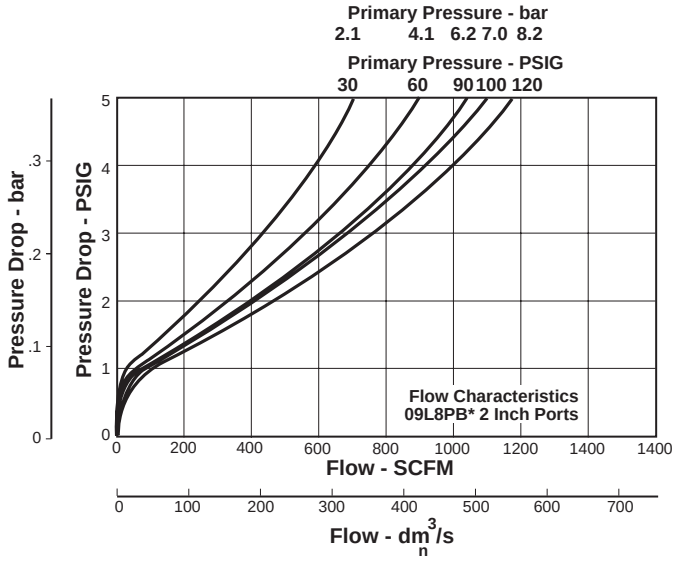

B

09L Lubricator Kits & Accessories

Fill Cap Kit PS610P

Lubricator Service Kit PS607P

Metal Bowl – Sight Gauge / Twist Drain PS612P*

Oil –
1 Gal. F442002
12 Quart Case F442003
4 Gallon Case F442005

Sight Dome Kit PS613P

* 1 Quart Bowl

Specifications

Bowl Capacity ..... 1 Qt. (Standard)
3 Qt. (Optional)

Bowl ..... Metal with Sight Gauge

Drain ..... Manual Twist Drain

Port Threads ..... 2 Inch

Pressure & Temperature Rating ..... 0 to 150 PSIG (0 to 10.3 bar)
32°F to 150°F (0°C to 66°C)

Suggested Lubricant ..... F442 Oil

Petroleum based oil of 100 to 200 SUS viscosity
at 100°F and an aniline point greater than 200°F

(DO NOT USE OILS WITH ADDITIVES,
COMPOUNDED OILS CONTAINING SOLVENTS,
GRAPHITE, DETERGENTS, OR SYNTHETIC OILS.)

Weight –
1 Qt. ..... 10.2 lb. (4.6 kg)
3 Qt. ..... 13.7 lb. (6.2 kg)

Materials of Construction

Body ..... Zinc Alloy, Die Cast

Pneumatic Division
Richland, Michigan
www.wattsfluidair.com

B11 / B12 General Purpose Filter / Regulators



Features

- High Flow Performance
- Diaphragm Operated Design
- Excellent Water Removal Efficiency
- Metal Bowl with Sight Gauge, Twist Drain and 40 Micron Element Standard
- Panel Mountable
- High Flow: 1/4" - 70 SCFM
  3/8" - 70 SCFM
  1/2" - 80 SCFM§
- **B11:** Push-to-Lock, Pull-to-Adjust. Adjusting Lock is engaged when Knob is Removed Rendering Unit Tamper Resistant
- **B12:** Heavy Duty Tee Handle Adjustment

NOTE: 1.75 Dia. (44mm) hole required for panel mounting.

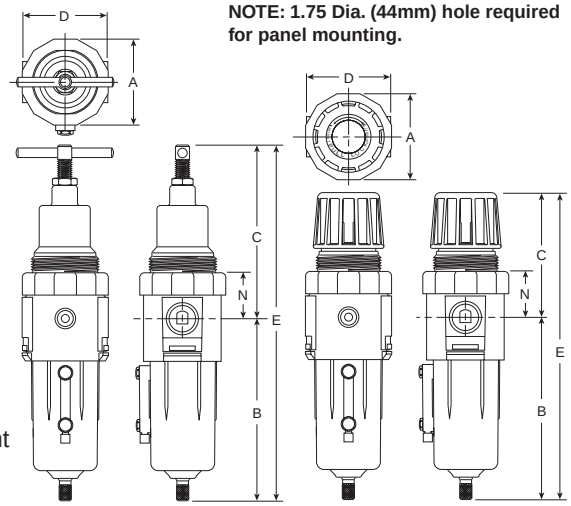

Port Size	B11 NPT		B12 NPT	
	Manual Twist Drain	Auto Drain	Manual Twist Drain	Auto Drain
Zinc Bowl / Sight Gauge				
1/4"	**B11-02WJC**	**B11-02WJCR**	**B12-02WJC**	**B12-02WJCR**
3/8"	**B11-03WJC**	**B11-03WJCR**	**B12-03WJC**	**B12-03WJCR**
1/2"	**B11-04WJC**	**B11-04WJCR**	**B12-04WJC**	**B12-04WJCR**

Bold Items are Most Popular.
For other models refer to ordering information below.

§ SCFM = Standard cubic feet per minute at 100 PSIG inlet, 75 PSIG no flow secondary setting, and 20 PSIG pressure drop.

B11 / B12 Integral Filter / Regulator Dimensions

A	B	C	D	E	N
B11					
2.33 (59)	4.97 (126)	3.41 (86.5)	2.23 (56)	8.38 (213)	1.25 (31.8)
B12					
2.33 (59)	4.97 (126)	4.69 (119)	2.23 (56)	9.69 (249)	1.25 (31.8)

inches
(mm)

Ordering Information

B	11	—	04	W	J	C		/**

Series
- 11 Tamper Resistant, Snap Lock, Removable Knob
- 12 Tee Handle

Port Threads
- **— NPT**
- G BSPP

Port Size
- **02 1/4 Inch**
- **03 3/8 Inch**
- **04 1/2 Inch**

Bowl
- D Metal without Sight Gauge
- **W Metal with Sight Gauge**

Elements
- G 5 Micron
- **J 40 Micron**

Reduced Pressure Range
- A 0-25 PSIG
- B 0-60 PSIG
- **C 0-125 PSIG**
- D 0-250 PSIG

Options
- G Gauge
- K Non-Relieving
- R Internal Auto Drain
- S Automatic Pulse Drain
- U Semi-Auto Drain
- X64 Fluorocarbon O-Rings and Diaphragm

Engineering Change Designator
- Will be entered at factory.

BOLD ITEMS ARE MOST POPULAR.

Pneumatic Division
Richland, Michigan
www.wattsfluidair.com

Technical Information

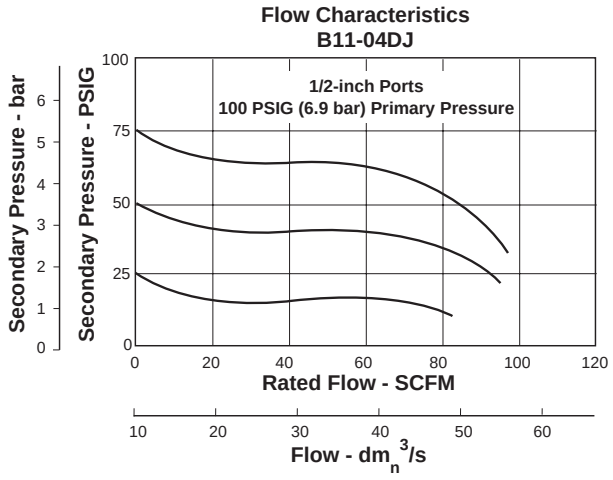

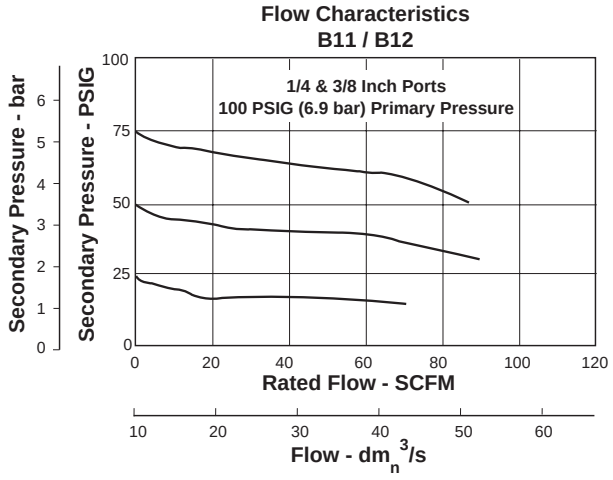

⚠ WARNING

Product rupture can cause serious injury.
Do not connect regulator to bottled gas.
Do not exceed maximum primary pressure rating.

⚠ CAUTION:

REGULATOR PRESSURE ADJUSTMENT – The working range of knob adjustment is designed to permit outlet pressures within their full range. Pressure adjustment beyond this range is also possible because the knob is not a limiting device. This is a common characteristic of most industrial regulators, and limiting devices may be obtained only by special design.
For best performance, regulated pressure should always be set by increasing the pressure up to the desired setting.

B11 / B12 Integral Filter / Regulator Kits & Accessories

Bowl Kits –
- Zinc (D) BKF11Y
- Zinc with Sight Gauge (W) BKF11WY

Cage Kits –
- B11 ..... CKR10Y
- B12 ..... CKR11Y

Drain Kits –
- Internal Auto Drain (Max. Press. = 175 PSIG; Max. Temp. = 120°F) SA602MD
- Automatic Pulse Drain (Maximum Pressure = 175 PSIG) 4210
- Semi-Automatic “Overnight” Drain ..... SA602A7 (Drains automatically under zero pressure)

Filter Element Kits –
- 40 Micron (All) EKF10Y
- 5 Micron (All) EKF10VY

Gauges –
- 2" Dial Size, 1/4" Back Connection 0 to 60 PSIG (0 to 400 kPa) K4520N14060
- 2" Dial Size, 1/4" Back Connection 0 to 160 PSIG (0 to 1100 kPa) K4520N14160
- 2" Dial Size, 1/4" Back Connection 0 to 300 PSIG (0 to 2068 kPa) K4520N14300

Mounting Bracket Kit SAR10Y57

Panel Mount Nut –
- Plastic R10X51-P
- Aluminum R10X51-A

* Specify same model / revision number for repair kit as for filter/regulator. For example, B11-02DJC/M3 uses RKR10YM3.

Repair Kits –
- Non-Relieving Diaphragm, Valve Assembly* (All) RKR10KY
- Relieving Diaphragm, Valve Assembly* (All) RKR10Y
- Internal Auto Drain Repair Kit RK602MD

Specifications

Bowl Capacity ..... 4 Ounces

Gauge Ports (2) ..... 1/4 Inch

Port Threads ..... 1/4, 3/8, 1/2 Inch

Supply Pressure
- Zinc Bowl (D) ..... 300 PSIG Maximum (20.4 bar)
- Zinc Bowl with Sight Gauge (W) ..... 250 PSIG Maximum (17.2 bar)
- with Auto Drain ..... 175 PSIG Maximum (12.1 bar)

Temperature Rating –
- Zinc Bowl ..... 40°F to 150°F (4.4°C to 65.6°C)
- Zinc Bowl with Auto Drain ..... 40°F to 125°F (4.4°C to 52°C)

Weight ..... 1.3 lb. (0.59 kg) / Unit
12.4 lb. (5.62 kg) / 8-Unit Master Pack

Materials of Construction

Adjusting Knob –
- **B11** ..... Acetal
- **B12 (Tee Handle)** ..... Steel

Body ..... Zinc

Bowls –
- Without Sight Gauge ..... Zinc
- With Nylon Sight Gauge ..... Zinc

Seals ..... Buna N

B

Standard Combinations – C10 & C11 Series

- See individual component pages for details.
- Gauges included on combinations.

Two & Three-Unit Combo



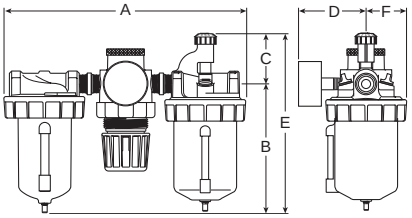

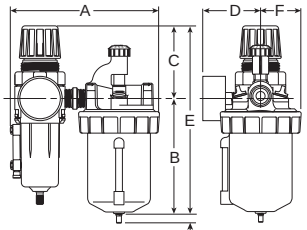

Add 9/16" For X9 Option

⚠ WARNING

Product rupture can cause serious injury. Do not connect regulator to bottled gas. Do not exceed maximum primary pressure rating.

Series	Port	Filter / Regulator with Lubricator	Filter, Regulator Lubricator
C10	1/4"	C10-02BLWJCW	C10-02FRLWJCW
	3/8"	C10-03BLWJCW	C10-03FRLWJCW
	1/2"	C10-04BLWJCW	C10-04FRLWJCW
C11	1/4"	C11-02BLWJCW	C10-02FRLWJCW
	3/8"	C11-03BLWJCW	C10-03FRLWJCW
	1/2"	C11-04BLWJCW	C10-04FRLWJCW

For other models, refer to ordering information below.

C10 / C11 Standard Combination Dimensions

A	B	C	D	E	F
C10-02BL, C10-03BL, C10-04BL					
6.96 (177)	6.16 (157)	3.41 (86)	2.69 (68)	9.57 (243)	1.88 (48)
C10-02FRL, C10-03FRL, C10-04FRL					
10.94 (4278)	6.64 (169)	2.39 (61)	2.69 (68)	9.03 (229)	1.88 (48)

Inches (mm) • All dimensions nominal.

Ordering Information

C	10	—	04	FRL	W	J	C	W	

Regulator Adjustment
- **10 Knob**
- **11 Tee Handle**

Port Size
- **02 1/4 Inch**
- **03 3/8 Inch**
- **04 1/2 Inch**

Combination
- **BL 2-Unit**
- **FRL 3-Unit**

Elements
- G 5 Micron
- **J 40 Micron**

Drains and Options
- H Button Head Fill Fitting (Lubricator)
- K Non-Relieving Regulator
- R Internal Auto Drain (Filter)
- X9* Manual Twist Drain on Plastic Bowl Lubricator (Increases Product Length by 9/16 Inch)

* Not Available with "W" Bowl.

Filter Bowl Options

Bowl	Description
B	Polycarbonate / Plastic Bowl Guard (Filter Only)
D	Metal wo/Sight Gauge (B-Unit Only)
W	**Metal w/Sight Gauge**

Regulator Reduced Pressure Range
- **C 0-125 PSIG**
- D 0-250 PSIG

Lubricator Bowl Options

Bowl	Description
B	Polycarbonate / Plastic Bowl Guard
W	**Metal w/Sight Gauge with Drain**

⚠ CAUTION:

REGULATOR PRESSURE ADJUSTMENT – The working range of knob adjustment is designed to permit outlet pressures within their full range. Pressure adjustment beyond this range is also possible because the knob is not a limiting device. This is a common characteristic of most industrial regulators, and limiting devices may be obtained only by special design. For best performance, regulated pressure should always be set by increasing the pressure up to the desired setting.

BOLD ITEMS ARE MOST POPULAR.

Pneumatic Division
Richland, Michigan
www.wattsfluidair.com

Standard Combinations – C628 Series

- See individual component pages for details.
- Gauges included on combinations.

Three-Unit Combo

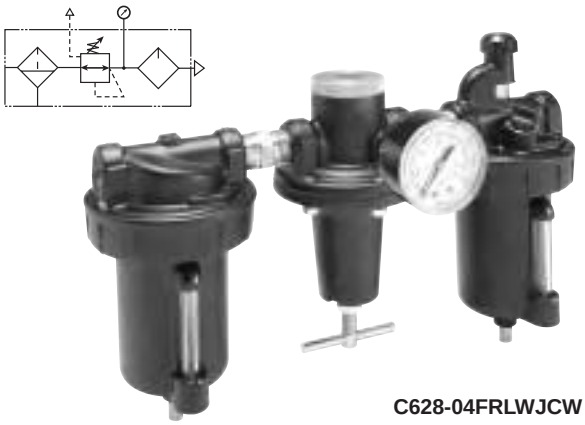

C628-04FRLWJCW Shown

Series	Port	Model Numbers
C628	1/4"	**C628-02FRLWJCW**
	3/8"	**C628-03FRLWJCW**
	1/2"	**C628-04FRLWJCW**
	3/4"	**C628-06FRLWJCW**
	1"	**C628-08FRLWJCW**
	1-1/4"	**C628-10FRLWJCW**
	1-1/2"	**C628-12FRLWJCW**

For other models, refer to ordering information below.

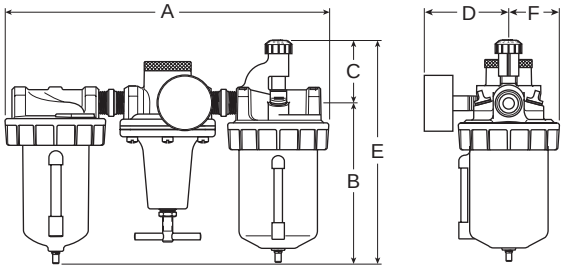

C628 Standard Combination Dimensions					
A	**B**	**C**	**D**	**E**	**F**
C628-02FRL, C628-03FRL					
8.75 (222)	5.38 (137)	2.25 (57)	2.63 (67)	7.63 (194)	1.50 (38)
C628-04FRL					
10.75 (273)	5.75 (146)	2.38 (60)	2.86 (73)	8.13 (206)	1.89 (48)
C628-06FRL, C628-08FRL					
15.75 (400)	7.75 (197)	5.25 (133)	3.52 (89)	13.00 (330)	2.48 (63)
C628-10FRL, C628-12FRL					
16.50 (419)	8.13 (206)	6.00 (152)	3.86 (98)	14.13 (359)	2.64 (67)

Inches (mm)

• All dimensions nominal.

B

Ordering Information

C	628	—	04	FRL	W	J	C	W	

Port Size

02 1/4 Inch
03 3/8 Inch
04 1/2 Inch
06 3/4 Inch
08 1 Inch
10 1-1/4 Inch
12 1-1/2 Inch

Filter Bowl Options

Bowl	Capacity	Description	Size
B	5 oz.	Polycarbonate w/Plastic Bowl Guard	1/4" & 3/8"
B	8 oz.	Polycarbonate w/Plastic Bowl Guard	1/2"
E	16 oz.	Large Capacity wo/Sight Gauge	1/2"
E	32 oz.	Large Capacity wo/Sight Gauge	3/4" thru 1-1/2"
W	**5 oz.**	**Metal w/Sight Gauge**	**1/4" & 3/8"**
W	**8 oz.**	**Metal w/Sight Gauge**	**1/2"**
W	**16 oz.**	**Metal w/Sight Gauge**	**3/4" thru 1-1/2"**

Elements

G 5 Micron
J 40 Micron

Regulator Reduced Pressure Range

C 0-125 PSIG
D 0-250 PSIG

Drains and Options

H Button Head Fill Fitting (Lubricator)
K Non-Relieving Regulator
Q External Heavy Duty Auto Drain (Filter)
R Internal Auto Drain (Filter)
X9* Manual Twist Drain on Plastic Bowl Lubricator (Increases Product Length by 9/16 Inch)

* Not Available with "W" Bowl.

Lubricator Bowl Options

Bowl	Capacity	Description	Size
B	5 oz.	Polycarbonate w/Plastic Bowl Guard	1/4" & 3/8"
B	8 oz.	Polycarbonate w/Plastic Bowl Guard	1/2"
E	16 oz.	Large Capacity wo/Sight Gauge	1/2"
E	32 oz.	Large Capacity wo/Sight Gauge	3/4" thru 1-1/2"
W	**5 oz.**	**Metal w/Sight Gauge w/Drain**	**1/4" & 3/8"**
W	**8 oz.**	**Metal w/Sight Gauge w/Drain**	**1/2"**
W	**16 oz.**	**Metal w/Sight Gauge w/Drain**	**3/4" thru 1-1/2"**

⚠ CAUTION:

REGULATOR PRESSURE ADJUSTMENT – The working range of knob adjustment is designed to permit outlet pressures within their full range. Pressure adjustment beyond this range is also possible because the knob is not a limiting device. This is a common characteristic of most industrial regulators, and limiting devices may be obtained only by special design. For best performance, regulated pressure should always be set by increasing the pressure up to the desired setting.

BOLD ITEMS ARE MOST POPULAR.

Pneumatic Division
Richland, Michigan
www.wattsfluidair.com

QIX Modular FRL System

B

QIX is the Premium FRL System for the Demanding, High Performance Manufacturer

Addressing the needs of the production-oriented plant more than a decade ago, WATTS FluidAir pioneered a break through in FRL technology. The QIX Series of high flow, generously sized filters, regulators lubricators and accessories.

Designed around the parameters of one inch pipe, every QIX component is manufactured with wide open internal porting for maximum efficiency and optimum performance at flow rates up to 250 SCFM.

QIX Means Less Downtime

Qix is short for "**Q**uick **I**nsert e**X**change". By means of removable connector -inserts, any QIX unit easily adapts to a variety of pipe sizes ranging from 1" down to 1/4". Each time you change pipe size or units, you change only the insert - not the filter, regulator , or lubricator. Pull two pins with a pair of pliers and your change is made in seconds.

QIX Means Less Inventory Plus Simplified Specification, Ordering and Service

The QIX concept enables you to stock one basic size filter, regulator or lubricator module along with an assortment of economical insert kits. You save as much as 50% on inventory. Working with fewer part numbers, you simplify engineering specs, lessen purchasing efforts and improve overall service.

Durable Textured Finish

All QIX components are powder coated to ensure a hard, durable finish.

Particulate Filters (F20)

Deflector plate insures maximum water removal while 40 micron element eliminates damaging particulate mater. Oil-removing coalescing filters (F21) are also available.

One-piece rugged metal bowls with sight gauge and bright liquid level indicating float are standard on all filters and lubricators.

Regulators (R20)

Accurate high-flow regulators are equipped with positive snap lock, push / pull adjusting knobs for easy operation. Bayonet style spring cage is removed with only the push of a button. Piston and o-ring is replaceable in seconds, using standard pliers.

Lubricators (L20)

Bypass valve system provides consistent lubrication under variable flow conditions. Removable adjusting knob renders the lubricator tamperproof (standard). QIX lubricators are fillable under pressure.

Inserts

All QIX components connect using inserts, o-rings and pins. Pins are easily removed using standard pliers. No special tools are required.

Threaded end inserts, 1/4" through 1", make it easy to replace a complete FRL in seconds without breaking pipe connections. Also allows you to stock only one FRL for all your 1/4" through 1" plant needs.

Shut-Off Valves (IK20V)

Isolate downstream equipment with three-way lockable shutoff valve, Complies with OSHA Standard 29 CFR Part 1910. Vented to relieve downstream pressure in off position.

Automatic Float Drain

Optional automatic float drain removes condensate as required. Manual drain is standard.

Pressure Switch

Low cost miniature pressure switch easily integrates into your QIX system via a porting block. The switch provides an electric signal when set pressure is achieved.

Porting Block

Insert style porting blocks are available with 1/4" NPT branch lines. They allow the mounting of a pressure switch or branching off a non-lubricated line.

QIX Modular FRL System

Quick
Insert
Xchange

B

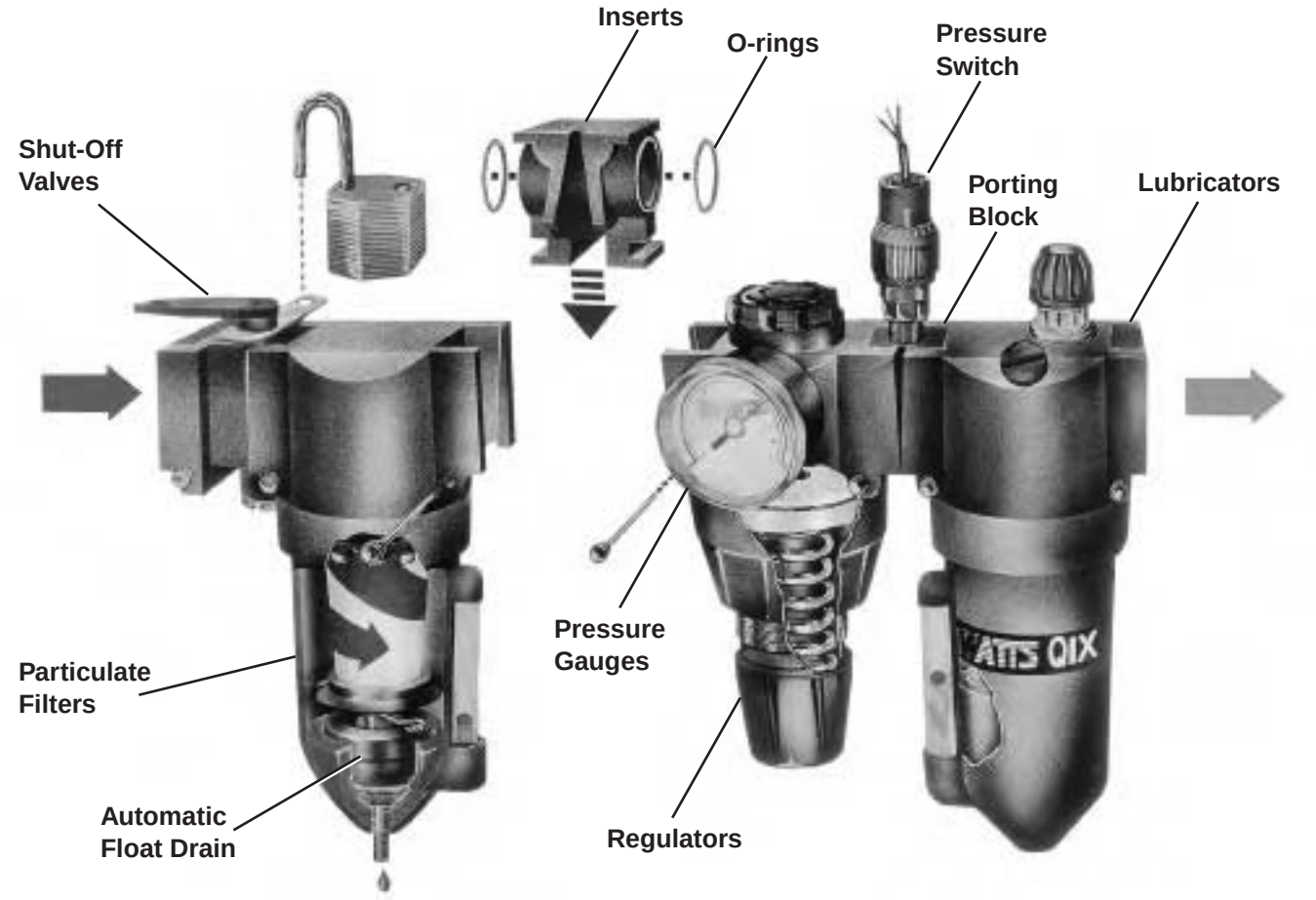

F20 & F21 QIX Particulate & Coalescing Filters

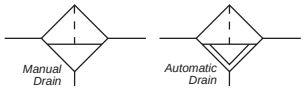



Features

- Unique Interchangeable QIX Inserts Allow One Module to Accommodate 5 Port Sizes 1/4", 3/8", 1/2", 3/4", 1"
- For Heavy Duty Applications with Minimum Pressure Drop Requirement
- Excellent Water Removal Efficiency
- Available in Both Particulate (F20) and Coalescing (F21) Configurations
- Metal Bowl with Sightgauge Standard
- Manual Drain Standard. Automatic Float Drain Optional
- High Flow - 180 SCFM for 3/4" & 1" Sizes (F20)
  20 SCFM (F21 Coalescing)

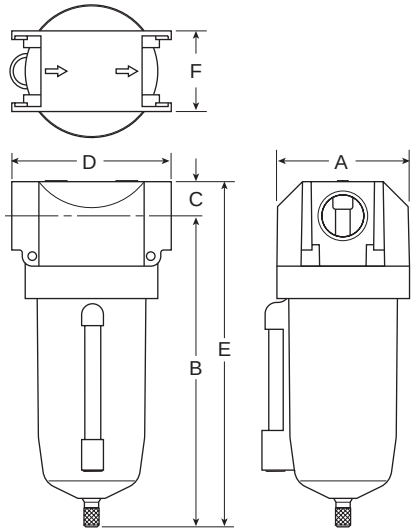

F20 & F21 Filter Dimensions						
A	**B**	**C**	**D***	**D****	**E**	**F**
2.90 (74)	6.82 (173)	.75 (19)	3.50 (89)	4.50 (114)	7.58 (192)	1.77 (45)

inches (mm)
* 1/4 thru 3/4 Inch Port Insert Size
** 1 Inch Port Insert Size

Ordering Information

F	20	—	00	W	J		/**

Filter Types
20 Particulate
21 Coalescing

Port Threads
— NPT
G* BSPP
*If ordering BSPP Port Inserts Separately - Order "-00" Unit

Port Size
00 No Port Inserts
02 1/4 Inch
03 3/8 Inch
04 1/2 Inch
06 3/4 Inch
08 1 Inch

Elements
J F20 40 Micron
G F20 5 Micron
J* F21 .3 Micron Coalescing
* Only Available with F21

Drains and Options
R Internal Auto Float Drain
S Automatic Pulse Drain
U Semi-Auto Drain

Engineering Change Designator
Will be entered at factory.

BOLD ITEMS ARE MOST POPULAR.

Pneumatic Division
Richland, Michigan
www.wattsfluidair.com

Technical Information

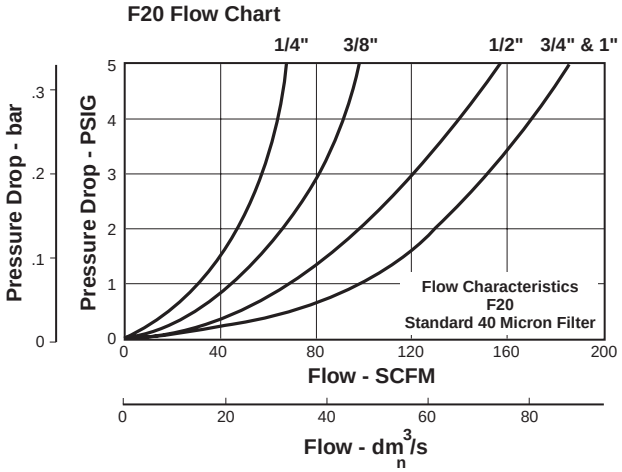

F21 Flow: 20 SCFM @ 100 PSIG

B

QIX F20 & F21 Kits & Accessories

Drains –
- Automatic Float Drain SA602MD
- Automatic Pulse Drain 4212
- Semi-Automatic "Overnight" Drain SA602A7
  (Drains automatically under zero pressure)

Bowl Kit BKF21WA

Bowl Sightgauge Repair Kit RKB605WB

Combination Connector IK20CC
(Connects 2 QIX units together)

Combination Porting Block IK20CP
(same as IK20CC, except with 1/8" top branch outlet)

Element Kits –
- Particulate (F20) 40 micron EKF20A
- Particulate (F20) 5 micron EKF20VA
- Coalescing (F21) .01 micron EKF601J

Mounting brackets (pair) MK20-0100
(Mounts directly to port inserts)

Port Insert Kits (includes o-rings & pins) NPT –
- 1/4" Port Size IK20Y
- 3/8" Port Size IK20X
- 1/2" Port Size IK20A
- 3/4" Port Size IK20B
- 1" Port Size IK20C

Shut-off Valve w/lockout (for inlet) IK20V

Specifications

Bowl Capacity ..... 10 oz.

Filter Element Rating –
- "J" (F20 particulate) ..... 40 micron
- "G" (F20 particulate) ..... 5 Micron
- "J" (F21 coalescing) ..... .01 Micron

Maximum Pressure ..... 250 PSIG
With Autodrain ..... 175 PSIG

Port Threads / Inserts –
- 00 ..... No Port Inserts
- 02 ..... 1/4"
- 03 ..... 3/8"
- 04 ..... 1/2"
- 06 ..... 3/4"
- 08 ..... 1"

Temperature Range ..... 40°F to 150°F (4.4°C to 65.6°C)
With Auto Drain ..... 40°F to 125°F (4.4°C to 52°C)

Weight ..... 2.1 lb
(For total weight add .1 lb for port inserts)

Materials of Construction

Body ..... Zinc

Bowl ..... Zinc

Drain ..... Brass

Filter Element –
- Particulate ..... Polypropylene
- Coalescing ..... Borosilicate Fibers

Thread Inserts ..... Zinc

Seals ..... Buna-N

Sightgauge ..... Nylon

R20 & R21 QIX Regulators

B

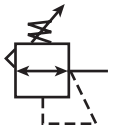



R21



R20

Features

- Unique Interchangeable QIX Inserts Allow One Module to Accommodate 5 Port Sizes 1/4", 3/8", 1/2", 3/4", 1"
- Piston Operated for High Flow Performance
- Secondary Aspiration Plus Balanced Poppet Provides Quick Response and Accurate Pressure Regulation
- Panel Mountable
- High Flow: 250 SCFM for 3/4" & 1" Port Sizes

R20 Features

- Push-to-Lock, Pull-to-Adjust, Remove-for-Tamper-Resistant Knob Feature

R21 Features

- Heavy Duty Tee Handle Adjustment

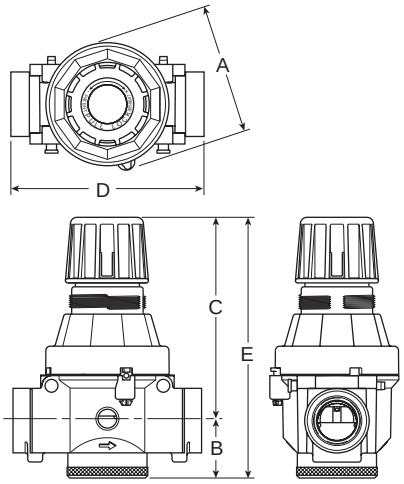

R20 / R21 Regulator Dimensions					
A	**B**	**C**	**D***	**D****	**E**
R20					
3.03 (77)	.75 (86)	4.70 (119)	3.50 (89)	4.50 (114)	6.10 (155)
R21					
3.03 (77)	.75 (86)	5.58 (142)	3.50 (89)	4.50 (114)	6.33 (161)

inches
(mm)
* 1/4 thru 3/4 Inch Port Insert Size
** 1 Inch Port Insert Size

Ordering Information

R	20	—	00	C		/**

Adjustment Type
20 Knob
21 Tee-Handle

Port Threads
— NPT
G* BSPP
*If ordering BSPP Port Inserts Separately - Order "G00" Unit

Port Size
00 No Port Inserts
02 1/4 Inch
03 3/8 Inch
04 1/2 Inch
06 3/4 Inch
08 1 Inch

Reduced Pressure
B 0-60 PSIG
C 0-120 PSIG
D 0-250 PSIG

Options
P Panel Mount Nut (Plastic)
G Gauge
K Non-Relieving

Engineering Change Designator
Will be entered at factory.

BOLD ITEMS ARE MOST POPULAR.

Pneumatic Division
Richland, Michigan
www.wattsfluidair.com

Technical Information

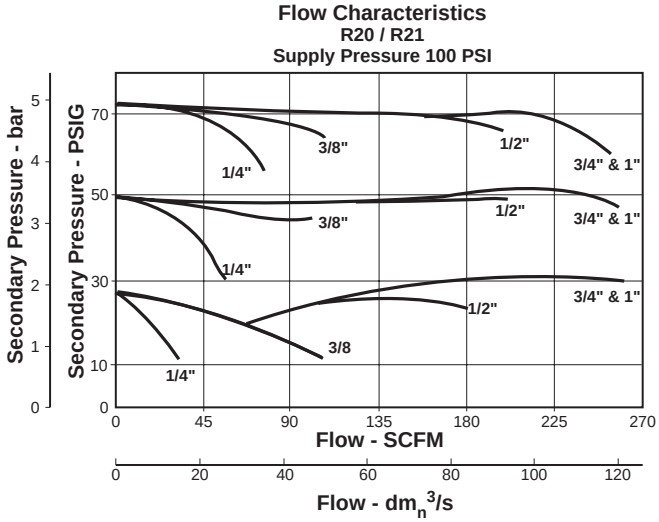

⚠ WARNING

Product rupture can cause serious injury.
Do not connect regulator to bottled gas.
Do not exceed maximum primary pressure rating.

⚠ CAUTION:

REGULATOR PRESSURE ADJUSTMENT – The working range of knob adjustment is designed to permit outlet pressures within their full range. Pressure adjustment beyond this range is also possible because the knob is not a limiting device. This is a common characteristic of most industrial regulators, and limiting devices may be obtained only by special design.
For best performance, regulated pressure should always be set by increasing the pressure up to the desired setting.

QIX R20 & R21 Kits & Accessories

Combination Connector IK20CC
(Connects 2 QIX units together)

Combination Porting Block IK20CP
(same as IK20CC, except with 1/8" top branch outlet)

Mounting brackets (pair) MK20-0100
(Mounts directly to port inserts)

Wall Mounting Bracket SAR20A57
(Uses panel mount threads - includes plastic panel mount nut)

Panel Mount Nut –
Plastic R10X51-P
Aluminum R10X51-A

Port Insert Kits (includes o-rings & pins) NPT –
1/4" Port Size IK20Y
3/8" Port Size IK20X
1/2" Port Size IK20A
3/4" Port Size IK20B
1" Port Size IK20C

Repair Kit - Internal Parts (Piston, Innervalve, Seals)
Relieving RKR20A
Non-Relieving (K) RKR20KA

Spring Cage Kit –
R20 ..... CKR20A
R21 ..... CKR21Y

Shut-off Valve w/lockout (for inlet) IK20V

Specifications

Gauge Ports ..... (2) 1/4"

Maximum Pressure ..... 300 PSIG

Port Threads / Inserts –
00 ..... No Port Inserts
02 ..... 1/4"
03 ..... 3/8"
04 ..... 1/2"
06 ..... 3/4"
08 ..... 1"

Reduced Pressure Range –
"B" ..... 0-60 PSIG
"C" ..... 0-120 PSIG
"D" ..... 0-250 PSIG

Temperature Range ..... 40°F to 150°F

Weight ..... 2.6 lb
(For total weight add .1 lb for port inserts)

Materials of Construction

Adjusting Knob ..... (R/B 20) Acetal

Adjusting Screw (all) ..... Steel

Body ..... Zinc

Bottom Plug ..... Brass

Innervalve ..... Brass

Piston ..... Nylon

Seals ..... Buna-N

Spring Cage ..... Zinc

Springs ..... Steel

Thread Inserts ..... Zinc

Pneumatic Division
Richland, Michigan
www.wattsfluidair.com

L20 QIX Lubricators



Features

- Unique Interchangeable QIX Inserts Allow One Module to Accommodate 5 Port Sizes 1/4", 3/8", 1/2", 3/4", 1"
- High Flow Venturi and By-pass Valve to Minimize Pressure Drop and Ensure Consistant Lubrication at All Rated Flows
- Excellent Water Removal Efficiency
- Tamper Resistant Removable Drip Control Knob
- Manual Drain Standard
- High Flow: 250 SCFM for 3/4" & 1" Port Sizes

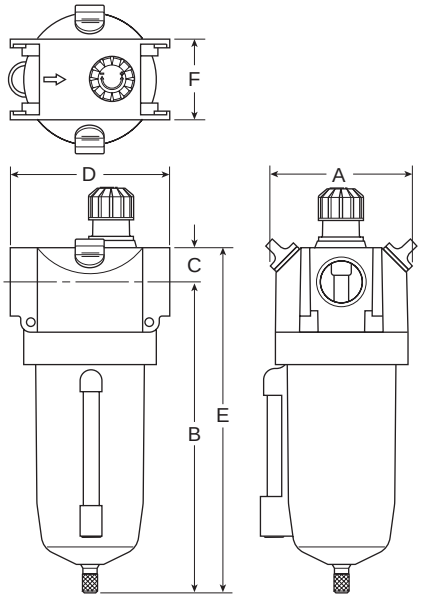

L20 Filter Dimensions						
A	**B**	**C**	**D***	**D****	**E**	**F**
3.13 (80)	6.82 (173)	2.04 (52)	3.50 (89)	4.50 (114)	8.86 (228)	1.77 (45)

inches
(mm)
* 1/4 thru 3/4 Inch Port Insert Size
** 1 Inch Port Insert Size

Ordering Information

L	20	—	00	W		/**

Port Threads
- **— NPT**
- G* BSPP

*If ordering BSPP Port Inserts Separately - Order "-00" Unit

Port Size
- **00 No Port Inserts**
- **02 1/4 Inch**
- **03 3/8 Inch**
- **04 1/2 Inch**
- **06 3/4 Inch**
- **08 1 Inch**

Options
- H Button Head Fill Fitting

Engineering Change Designator
Will be entered at factory.

BOLD ITEMS ARE MOST POPULAR.

Pneumatic Division
Richland, Michigan
www.wattsfluidair.com

Technical Information

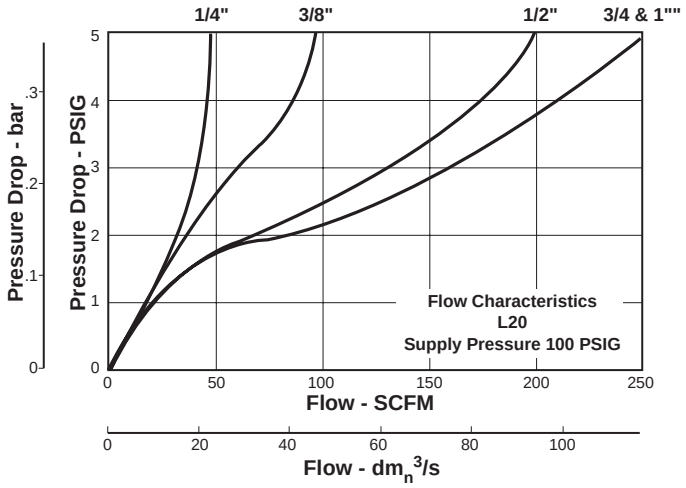

B

QIX L20 Kits & Accessories

Bowl Kit BKF21WA

Bowl Sightgauge Repair Kit RKB605WB

Button Head Fill Fitting L606C14
(M14 male thread)

Combination Connector IK20CC
(Connects 2 QIX units together)

Drip Control Repair Kit RKL100

Internal By-pass Repair Kit RKL20A

Mounting Brackets (pair) MK20-0100

Port Insert Kits (includes o-rings & pins) NPT –
1/4" Port Size IK20Y
3/8" Port Size IK20X
1/2" Port Size IK20A
3/4" Port Size IK20B
1" Port Size IK20C

Shut-off Valve w/lockout (for inlet) IK20V

Specifications

Bowl Capacity ..... 10 oz.

Maximum Pressure ..... 250 PSIG

Port Threads / Inserts –
00 ..... No Port Inserts
02 ..... 1/4"
03 ..... 3/8"
04 ..... 1/2"
06 ..... 3/4"
08 ..... 1"

Temperature Range ..... 40°F to 150°F

Weight ..... 3.3 lb
(For total weight add .1 lb for port inserts)

Materials of Construction

Body ..... Zinc

Bowl ..... Zinc

Drain ..... Brass

Drip Control ..... Polyurethane

Seals ..... Buna-N

Sightgauge ..... Nylon

Thread Inserts ..... Zinc

B20 & B21 QIX Filter / Regulators

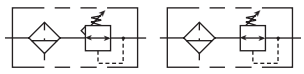



B21



B20

Features

- Unique Interchangeable QIX Inserts Allow One Module to Accommodate 5 Port Sizes 1/4", 3/8", 1/2", 3/4", 1"
- Piston Operated Regulator for High Flow Performance
- Excellent Water Removal Efficiency
- Secondary Aspiration Plus Balanced Poppet Provides Quick Response and Accurate Pressure Regulatorion
- Excellent Water Removal Efficiency
- Manual Drain Standard
- Automatic Drain Optional
- Panel Mountable
- High Flow: 250 SCFM for 3/4" & 1" Port Sizes

B20 Features
- Push-to-Lock, Pull-to-Adjust, Remove-for-Tamper Resistant Knob Feature

B21 Features
- Heavy Duty Tee Handle Adjustment

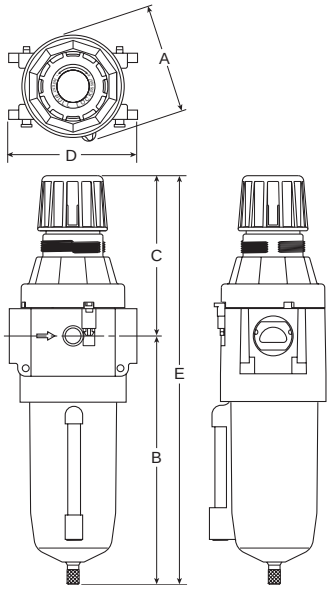

B20 / B21 Dimensions Dimensions					
A	**B**	**C**	**D***	**D****	**E**
B20					
3.03 (77)	6.82 (173)	4.45 (113)	3.50 (89)	4.50 (114)	11.27 (286)
B21					
3.03 (77)	6.82 (86)	5.58 (142)	3.50 (89)	4.50 (114)	12.40 (315)

inches
(mm)
* 1/4 thru 3/4 Inch Port Insert Size
** 1 Inch Port Insert Size

Ordering Information

B	20	—	00	W	J	C		/**

Adjustment Type
- **20 Knob**
- 21 Tee Handle

Port Threads
- **— NPT**
- G* BSPP

* If ordering BSPP Port Inserts Separately - Order "G00" Unit

Port Size
- **00 No Port Inserts**
- **02 1/4 Inch**
- **03 3/8 Inch**
- **04 1/2 Inch**
- **06 3/4 Inch**
- **08 1 Inch**

Elements
- G 5 Micron
- **J 40 Micron**

Reduced Pressure Range
- B 0-60 PSIG
- **C 0-125 PSIG**
- D 0-250 PSIG

Drains and Options
- G Gauge
- K Non-Relieving
- P Panel Mount Nut (Plastic)
- R Internal Auto Float Drain
- S Automatic Pulse Drain
- U Semi-Auto Drain

Engineering Change Designator
- Will be entered at factory.

BOLD ITEMS ARE MOST POPULAR.

Pneumatic Division
Richland, Michigan
www.wattsfluidair.com

Technical Information

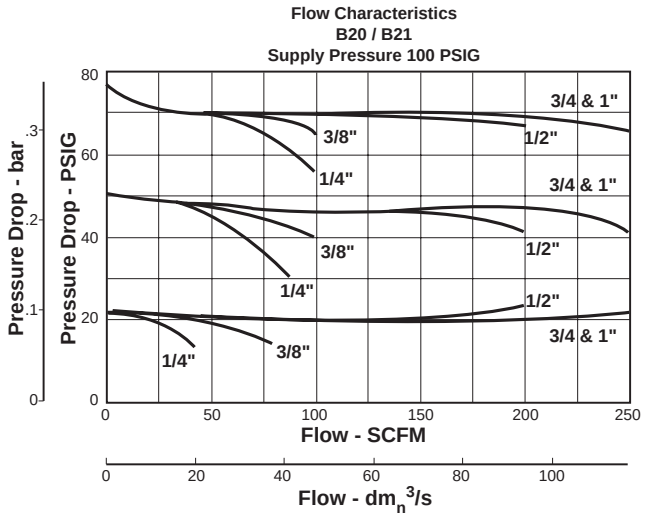

⚠ WARNING

Product rupture can cause serious injury.
Do not connect regulator to bottled gas.
Do not exceed maximum primary pressure rating.

⚠ CAUTION:

REGULATOR PRESSURE ADJUSTMENT – The working range of knob adjustment is designed to permit outlet pressures within their full range. Pressure adjustment beyond this range is also possible because the knob is not a limiting device. This is a common characteristic of most industrial regulators, and limiting devices may be obtained only by special design.
For best performance, regulated pressure should always be set by increasing the pressure up to the desired setting.

B

QIX B20 & B21 Kits & Accessories

Drains –
- Automatic Float Drain SA602MD
- Automatic Pulse Drain 4212
- Semi-Automatic "Overnight" Drain SA602A7
  (Drains automatically under zero pressure)

Bowl Kit BKF21WA

Bowl Sightgauge Repair Kit RKB605WB

Combination Connector IK20CC
(Connects 2 QIX units together)

Combination Porting Block IK20CP
(same as IK20CC, except with 1/8" top branch outlet)

Element Kits–
- Particulate (F20) 40 micron EKF20A
- Particulate (F20) ..... 5 micron EKF20VA

Mounting Brackets (pair) MK20-0100

Panel Mount Nut –
- Plastic R10X51-P
- Aluminum R10X51-A

Port Insert Kits (includes o-rings & pins) NPT –
- 1/4" Port Size IK20Y
- 3/8" Port Size IK20X
- 1/2" Port Size IK20A
- 3/4" Port Size IK20B
- 1" Port Size IK20C

Repair kit - internal parts (piston, innervalve, seals) –
- Relieving RKR20A
- Non-Relieving (K) RKR20KA

Spring Cage Kit –
- R20 ..... CKR20A
- R21 ..... CKR21Y

Wall Mounting Bracket ..... SAR 20A57
(uses panel mount threads - includes plastic panel mount nut)

Specifications

Bowl Capacity ..... 10 oz.

Filter Element Rating –
- "J" (particulate) ..... 40 micron
- "G" (particulate) ..... 5 Micron

Gauge Ports (2) ..... 1/4"

Maximum Pressure ..... 250 PSIG
With Auto Drain ..... 175 PSIG

Port Threads / Inserts –
- 00 ..... No Port Inserts
- 02 ..... 1/4"
- 03 ..... 3/8"
- 04 ..... 1/2"
- 06 ..... 3/4"
- 08 ..... 1"

Reduced Pressure Range –
- "B" ..... 0-60 PSIG
- "C" ..... 0-120 PSIG
- "D" ..... 0-250 PSIG

Temperature Range ..... 40°F to 150°F (4.4°C to 65.6°C)
With Auto Drain ..... 40°F to 125°F (4.4°C to 52°C)

Weight ..... 4.5 lb
(For total weight add .1 lb for port inserts)

Materials of Construction

Adjusting Knob (R/B 20) ..... Acetal

Adjusting Screw (all) ..... Steel

Body ..... Zinc

Bottom Plug ..... Brass

Bowl ..... Zinc

Drain ..... Brass

Filter Element (particulate) ..... Polypropylene

Innervalve ..... Brass

Piston ..... Nylon

Seals ..... Buna-N

Sightgauge ..... Nylon

Spring Cage ..... Zinc

Springs ..... Steel

Thread Inserts ..... Zinc

Pneumatic Division
Richland, Michigan
www.wattsfluidair.com

B

QIX Combinations – C20 / C21 Series

- See individual component pages for details.
- Gauges included on combinations.

Three-Unit Combo

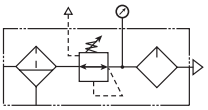

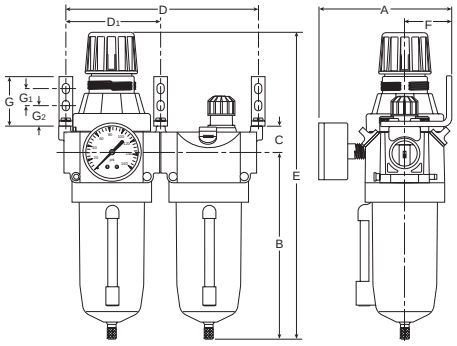

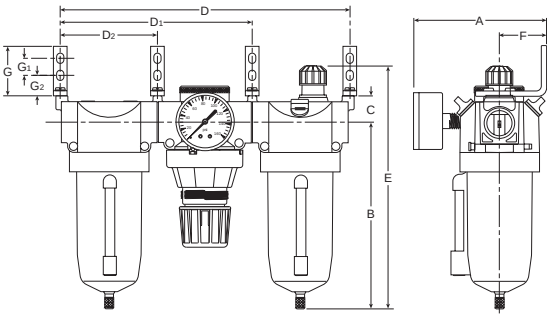



C20-BL



C20-FRL

C20-FRL Dimensions					
A 4.78 (121)	**B** 6.83 (173)	**C** .96 (24)	**D*** 10.60 (269)	**D**** 10.70 (271)	**D_1** 7.13 (181)
D_2 3.57 (91)	**E** 8.89 (226)	**F** 1.69 (43)	**G** 1.81 (46)	**G_1** .75 (19)	**G_2** .63 (16)
C20-BL Dimensions					
A 4.78 (121)	**B** 6.83 (173)	**C** .96 (24)	**D*** 7.31 (186)	**D**** 7.41 (188)	**D_1** 3.57 (91)
E 11.27 (286)	**F** 1.69 (43)	**G** 1.81 (46)	**G_1** .75 (19)	**G_2** .63 (16)	

inches
(mm)
* 1/4 thru 3/4 Inch Port Insert Size
** 1 Inch Port Insert Size

Ordering Information

C	20	—	00	FRL BL	W	J	C	W		/**

Adjustment Type
20 Knob
21 Tee Handle

Port Threads
— NPT
G* BSPP
* If ordering BSPP Port Inserts Separately - Order "G00" Unit

Port Size
02 1/4 Inch
03 3/8 Inch
04 1/2 Inch
06 3/4 Inch
08 1 Inch

Combination
BL 2-Unit
FRL 3-Unit

Regulator Reduced Pressure Range
B 0-60 PSIG
C 0-125 PSIG
D 0-250 PSIG

Elements
G 5 Micron
J 40 Micron

Drains and Options
K Non-Relieving
R Internal Auto Float Drain
S Automatic Pulse Drain

Engineering Change Designator
Will be entered at factory.

⚠ CAUTION:
REGULATOR PRESSURE ADJUSTMENT – The working range of knob adjustment is designed to permit outlet pressures within their full range. Pressure adjustment beyond this range is also possible because the knob is not a limiting device. This is a common characteristic of most industrial regulators, and limiting devices may be obtained only by special design. For best performance, regulated pressure should always be set by increasing the pressure up to the desired setting.

BOLD ITEMS ARE MOST POPULAR.

Pneumatic Division
Richland, Michigan
www.wattsfluidair.com

QIX Accessories

QIX Port Insert Kits & Accessories

Port Insert Kits (includes o-rings & pins) NPT *BSPP*

Port Size	NPT	BSPP
1/4"	IK20Y	IK20YG
3/8"	IK20X	IK20XG
1/2"	IK20A	IK20AG
3/4"	IK20B	IK20BG
1"	IK20C	IK20CG
Combination Connector (connects 2 QIX units together)	IK20CC	IK20CC
Combination Porting Block (same as IK20CC, except with 1/4" top branch outlet)	IK20CP	IK20GCP
IK20CP Porting Block and 1908 Pressure Switch	PST20	—

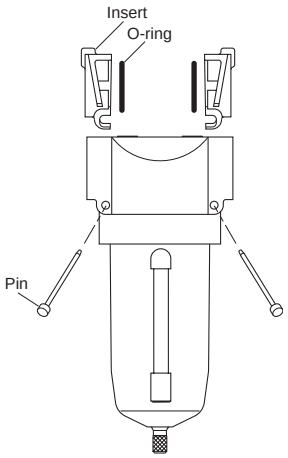

Port Insert Assembly

QIX MK20 Mounting Brackets

Part Number: MK20-0100

Kit contains 2 brackets and 4 screws

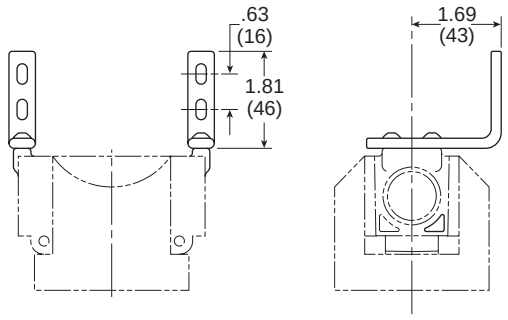

QIX IK20V Shut-Off Valve

This modular, 3-way ball valve attaches between the port insert and the inlet side of any QIX component. This valve shuts off the air pressure and vents the downstream pressure through a 1/8" NPTF port in the bottom of the valve.
The valve comes standard with a "lockout" feature as required by OSHA Standard 1910.147
Valve adds 1.4" to width of system.



Pressure Switch – P01908



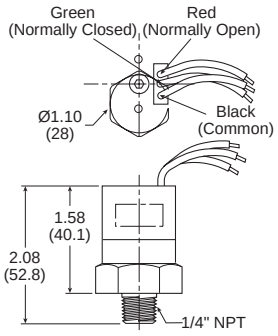

Features:

- Inline Mounting
- 5 amp Rated Snap Action Micro Switch
- Brass Body
- Compact Size
- Flying Leads Electrical Connection
- IP65 Rated
- Field Adjustable 25-100 PSIG
- +/- 2% Repeatability
- Single Pole / Double Throw Switch

Specifications

Electrical.....5 AMP, 12/24VDC, 125/250VAC
Maximum Inlet Pressure..... 300 PSIG (20 bar)
Mechanical Life.....$2x10^6$ at 75 PSIG (5 bar)
Electrical Connection.....18" Flying Leads
Electrical Protection.....IP65
Pressure Differential "Dead Band"....15 to 20 PSIG (1.03 to 1.39 bar)
Repeatability.....±2% at 70°F (20°C) Ambient
Temperature Range..... -40°F to 180°F (-40°C to 80°C)
Weight..... 0.23 lb. (0.11 Kg)
Diaphragm.....Nitrile
Housing..... Brass

Pneumatic Division
Richland, Michigan
www.wattsfluidair.com

Inline Bronze Filters



137



137A

Features

- All Bronze Unit
- Designed for Applications where Fine Straining of Air is Required
- Porous Bronze Element Strains Out Particles Larger than 90 Microns (.0035 Inch)

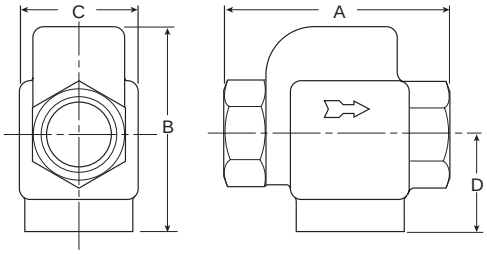

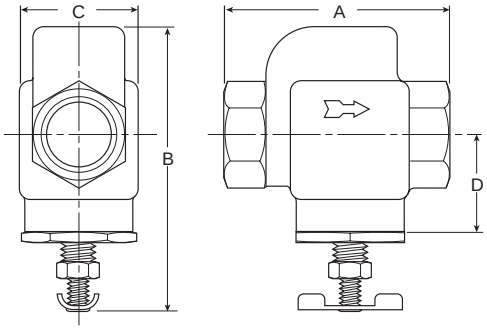

Port Size	90 Micron Element*	
	No Drain	With Manual Petcock Drain
1/4"	**137-02**	137-02A
3/8"	**137-03**	137-03A
1/2"	**137-04**	**137-04A**

* Add "V" Suffix for 5 Micron Element.

In-Line Bronze Filters			
A	**B**	**C**	**D**
With No Drain			
2.63 (66.7)	2.38 (60)	1.41 (35.7)	1.16 (29.4)
With Manual Twist Drain			
2.63 (66.7)	3.19 (81)	184 (46.8)	1.16 (29.4)

inches
(mm)

Replacement Elements

5 Micron.....137AY77-5
20 Micron.....137AY77-20
90 Micron.....RK137Y

Specifications

Maximum Pressure .....300 PSIG

Performance –
Pressure Drop (PSIG) at Various Conditions

Flow	**5**	**10**	**15**	**20**	**25**
Supply Pressure 100 PSIG	.05	.15	.06	1.20	1.70
Supply Pressure 150 PSIG	.02	.10	.30	.70	1.00

Weight –
1/4" & 3/8".....9 lb. (0.41 kg) / Unit
44 lb. (19.96 kg) / 48-Unit Master Pack
1/2" .....1.1 lb. (0.49 kg) / Unit
54 lb. (24.49 kg) / 48-Unit Master Pack

Materials of Construction

Body.....Bronze

Element –
Standard.....90 Micron Porous Bronze
Optional.....5 Micron Porous Bronze

Seals.....Buna N

Pneumatic Division
Richland, Michigan
www.wattsfluidair.com

D11-04 Tank Drain



Features

- Metal Bowl without Sight Glass
- Port Size – 1/2 Inch NPTF
- Minimum Supply Pressure – 30 PSIG
- Maximum Supply Pressure – 175 PSIG
- Max. Operating Temperature – 125° F (52° C)

- Body – Zinc
- Bowl – Zinc
- Seals – Buna-N
- Bowl Capacity – 4 oz.
- Weight per Unit – 1 lb.
- Master Pack Quantity – 24
- Master Pack Weight – 25 lbs.

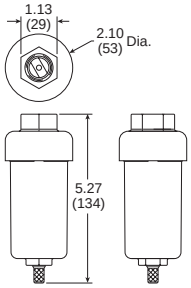

D11-04W Tank Drain



Features

- Metal Bowl with Sight Glass
- Port Size – 1/2 Inch NPTF
- Minimum Supply Pressure – 30 PSIG
- Maximum Supply Pressure – 175 PSIG
- Max. Operating Temperature – 125° F (52° C)

- Body – Zinc
- Bowl – Zinc
- Seals – Buna-N
- Bowl Capacity – 4 oz.
- Weight per Unit – 1 lb.
- Master Pack Quantity – 24
- Master Pack Weight – 25 lbs.

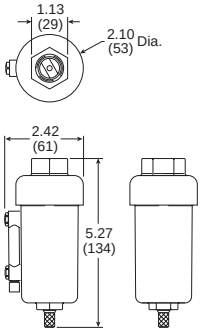

608-04D Tank Drain



Features

- Polycarbonate Bowl with Polyethylene Bowl Guard
- Port Size – 1/2 Inch NPTF
- Minimum Supply Pressure – 30 PSIG
- Maximum Supply Pressure – 150 PSIG
- Max. Operating Temperature – 125° F (52° C)

- Body – Aluminum
- Bowl – Polycarbonate
- Seals – Buna-N
- Bowl Capacity – 8 oz.
- Weight per Unit – 2 lb.
- Master Pack Quantity – 8
- Master Pack Weight – 17 lbs.

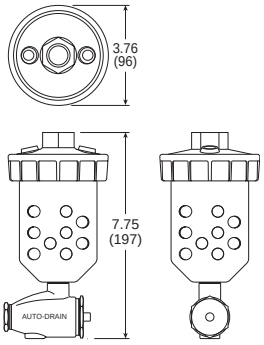

608-04DW Tank Drain



Features

- Metal Bowl with Sight Glass
- Port Size – 1/2 Inch NPTF
- Minimum Supply Pressure – 30 PSIG
- Maximum Supply Pressure – 255 PSIG
- Max. Operating Temperature – 125° F (52° C)

- Body – Aluminum
- Bowl – Zinc
- Seals – Buna-N
- Bowl Capacity – 8 oz.
- Weight per Unit – 2 lb.
- Master Pack Quantity – 8
- Master Pack Weight – 17 lbs.

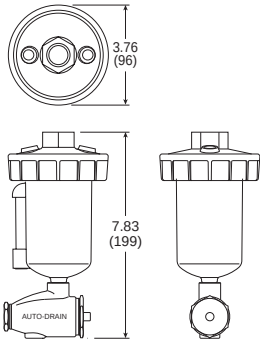

Pneumatic Division
Richland, Michigan
www.wattsfluidair.com

B

WMPS32 Digital Pressure Gauge / Sensor



Features

- Pressure Ranges:
  Positive Pressure 0 to 145 PSI
- Sensor Output:
  2 NPN or PNP Open Collector
  Transistor Output, 30VDC, 125mA
  Optional Analog Output, 4 to 20mA
  Optional Analog Output, 1 to 5VDC
- Switch Point and Window Comparator Mode
- 4 Selectable Units of Measure
  (mmHg, -bar, -kPa, inHg)
  (kgf/cm^2, PSI, bar, kPa)
- Output Response Time Less Than 2.0 Milliseconds
- RoHS
- Air and Non-Corrosive Gases
- Error Message

Dimensions

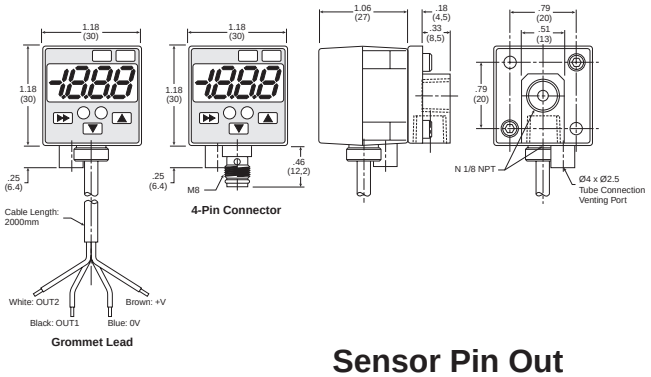

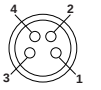

Pin #

1 Brown: 24VDC
2 White: NPN / PNP Open Collector Output 2
3 Blue: 0VDC
4 Black: NPN / PNP Open Collector Output 1

Lead Wiring



Sensor Pin Out with Analog Output

Current Output



Pin #

1 Brown: 24VDC
2 White: 4 to 20mA
3 Blue: 0VDC
4 Black: PNP Open Collector Output 1

Voltage Output



Pin #

1 Brown: 24VDC
2 White: 1 to 5VDC
3 Blue: 0VDC
4 Black: PNP Open Collector Output 1

⚠ Cautions

The MPS-32 Pressure Sensor is designed to monitor pressure and is not a safety measure to prevent accidents. The compatibility of the sensor is the responsibility of the designer of the system and specifications.

Operating Environment

- Parker Sensors have not been investigated for explosion-proof construction in hazardous environments.
- Do not use with flammable gases, liquids, or in hazardous environments.
- Avoid installing the sensor in locations where excessive voltage surges could damage or affect the performance of the sensor.

Operations

- Dedicate a power supply of 10.8 to 26.4VDC to the sensor and set the ripple to Vp-p10% or less. Avoid excessive voltage. Avoid voltage surges.
- A small amount of internal voltage drop is possible. Ensure the power supply minus any internal voltage drop exceeds the operating load.
- Verify the operating media is compatible with the specified sensor. Check the chemical make-up, operating temperatures, and maximum pressure ranges of the system before installing.
- Installation of air dryer system is recommended to remove moisture.

Installation

- Never insert an object into the pressure port other than an appropriate fluid connector.
- Avoid short-circuiting the sensor. Connect the brown lead to V+ and blue lead to 0V.
- Do not connect the output lead wires (black / white) to the power supply.
- Outputs not being used should be trimmed and insulated.
- Install as shown using the metal mounting bracket.

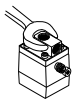

Error Messages

Display	Description	Solutions
Err	Zero Reset Error	Reset Zero Below 3% of F.S.
Er1	System Error (Internal)	Contact Factory
CE1	Over current of Output 1	Load current exceeds maximum 125mA.
FFF –FF	Applied pressure exceeds pressure range	Apply pressures within the rating of the sensor

Pneumatic Division
Richland, Michigan
www.wattsfluidair.com

MPS-32 Ordering Numbers

Pressure Range	Port Size	Output Circuit	Electrical Connector	Part Number
0 to 145 PSI	1/8 NPSF*	PNP Sourcing	4 Pin, M8	**MPS-P32N-PC**
			2M Lead Wire	**MPS-P32N-PG**
		NPN Sinking	4 Pin, M8	MPS-P32N-NC
			2M Lead Wire	MPS-P32N-NG
		PNP Sourcing with 4-20ma	4 Pin, M8	**MPS-P32N-PCI**
		PNP Sourcing with 1-5VDC	4 Pin, M8	MPS-P32N-PCA

* Mounting Bracket Included

Internal Circuit for Open Collector and Analog Output Wiring

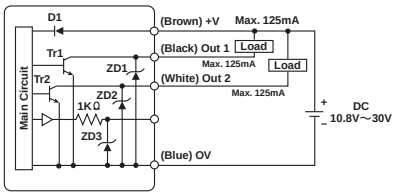

NPN (2 Open Collector Output)

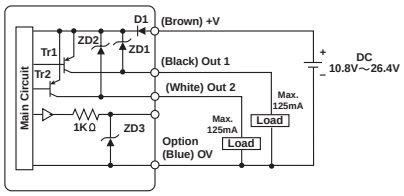

PNP (2 Open Collector Output)

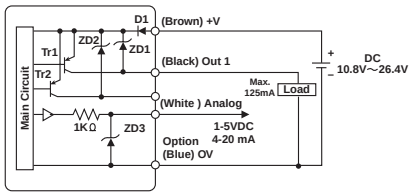

PNP (with Analog Output)

Specifications

Pressure Range		Positive (P)
Units of Measure Display Resolution (with unit-switching function)		bar: 0.01 MPa: 0.001 kgf/cm^2: 0.01 PSI: 1
Proof Pressure		0 to 1 MPa
Media		Air & Non-Corrosive Gases
Pressure Port		**(N)** 1/8" NPSF
Operating Temperature		32 to 122°F (0 to 50°C)
Storage Temperature		14 to 140°F (-10 to 60°C)
Humidity		35 to 85% RH
Electrical Connection		**(C)** 4-Pin, M8 Connector, **(G)** Grommet Open Lead
Power Supply		12 to 24VDC ±10% or less, Ripple (Vp-p) 10% or less
Display		3 + 1/2 Digit, 2 Color, 7-Segment LED
Display Refresh		.1 to 3.0 Seconds, Variable (Factory set at 0.1)
Control Output		NPN (Sinking), PNP (Sourcing), Open Collector, max 125mA, 2 Output
Switch Output		Output Signal, NPN or PNP, Normally Open or Closed, LED Indicator
Output Modes		Hysteresis or Window Comparator
Response Time		2ms or less,(Variable 32, 128, 1024ms)
Repeatability		± 03% of F.S. ± 1 digit or less
Analog Output	Voltage Output	1 to 5VDC (1 ± 0.04V, 5 ± 0.04V); Outout Impedance 1kΩ; Linearity 0.5% of F.S.; Response Time 2ms or less
	Current Output	4 to 20mA; Linearity ±0.5% of F.S. or less; Maximum Load Impedance 300Ω with Power Supply Voltage of 12V; 600Ω with Power Supply Voltage of 12V; Minimum Load Impedance 50Ω
Thermal Error		32 to 122°F (0 to 50°C) 25°C (77°C) ± 2% of F.S. or less at range of 32 to 122°F (0 to 50°C)
General Protection		IP50, CE Marked, EMC-EN61000-6-2: 2001
Current Consumption		<80mA
Vibration Resistance		10 to 150Hz, Double Amplitude 1.5mm, XYZ, 2 hrs.
Shock Resistance		10G, XYZ
Material		**Housing:** ABS (gray) , **Pressure Port:** Zinc Die-cast, **Diaphragm:** Silicone
Mass		1.7 oz. (45g) (Not including cable)

B

WMPS32 Programming

1 Hold ⏩ Press ⏫ 1x

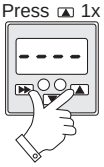

Output Set Open or Closed Selecting Units of Measure

Easy Mode Activation

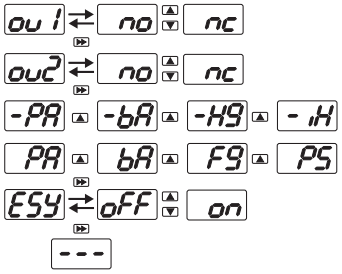

2 Press ⏩ 2x

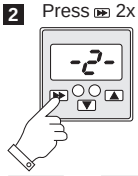

Output Mode 1 Hysteresis or Window Comparator

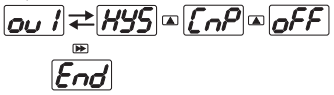

3 Press ⏩ 4x

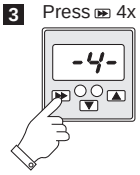

Output Mode 2 Hysteresis or Window Comparator



4 Press ⏩ 1x

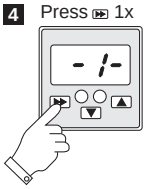

Output 1 Switch Point Setting

Hysteresis Mode

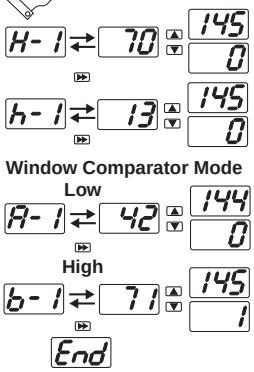

5 Press ⏩ 3x

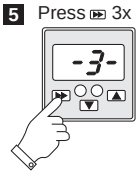

Output 2 Switch Point Setting

Hysteresis Mode

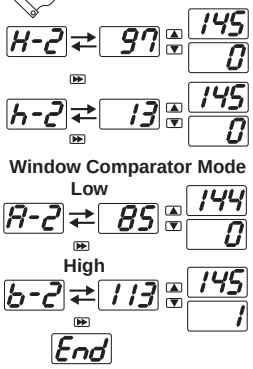

6 Press ⏩ 5x

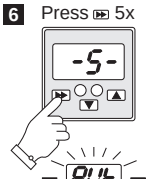

Automatic Teach Mode & Auto Surveillance

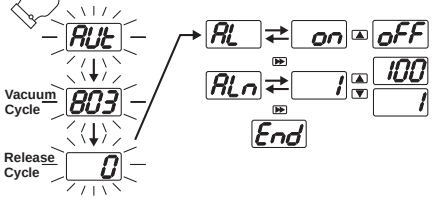

Note: When Auto Survelillance is turned on P1 is added to Output 1 setting, Output 2 is turned off and P-1 becomes Output 2.



7 Press ⏩ 6x

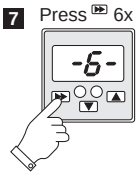

Display Refresh Settings / Output Response Time Interval

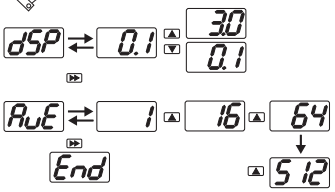

8 Press ⏩ 7x

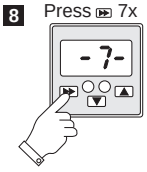

Display Peak Value Bottom Value or Their Difference

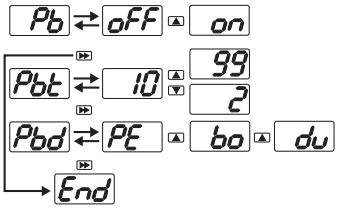

9 Press ⏩ 8x

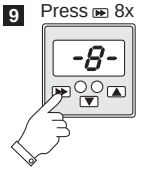

Special Display Features

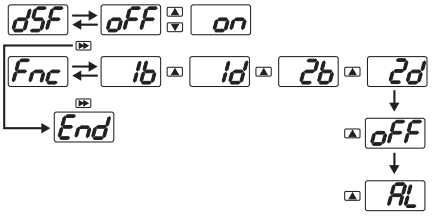

10 Press ⏩ 9x

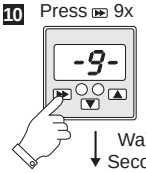

Display Color Choices Red and / or Green, Energy Save

Or Press ⏬ 1x to Return

Wait 3 Seconds

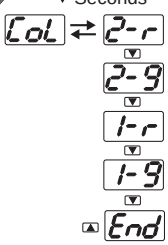

Output	On	Off
2-r	Red	Green
2-9	Green	Red
1-r	Red	Red
1-9	Green	Green

11 Hold ⏩ Press ⏬ 1x

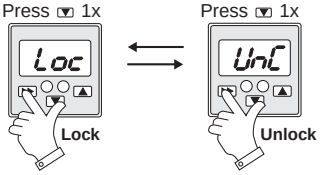

12 Press ⏫ 1x

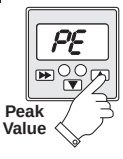

Peak Value

Press ⏬ 1x

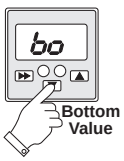

Bottom Value

13 Press ⏩ for 3 Seconds **Zero Reset**

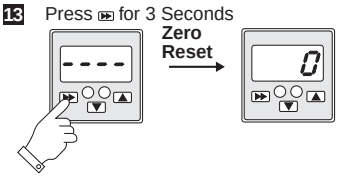

Safety Guide For Selecting And Using Pneumatic Division Products And Related Accessories

⚠ WARNING:

FAILURE OR IMPROPER SELECTION OR IMPROPER USE OF PNEUMATIC DIVISION PRODUCTS, ASSEMBLIES OR RELATED ITEMS ("PRODUCTS") CAN CAUSE DEATH, PERSONAL INJURY, AND PROPERTY DAMAGE. POSSIBLE CONSEQUENCES OF FAILURE OR IMPROPER SELECTION OR IMPROPER USE OF THESE PRODUCTS INCLUDE BUT ARE NOT LIMITED TO:

- Unintended or mistimed cycling or motion of machine members or failure to cycle
- Work pieces or component parts being thrown off at high speeds.
- Failure of a device to function properly for example, failure to clamp or unclamp an associated item or device.
- Explosion
- Suddenly moving or falling objects.
- Release of toxic or otherwise injurious liquids or gasses.

Before selecting or using any of these Products, it is important that you read and follow the instructions below.

1. GENERAL INSTRUCTIONS

1.1. Scope: This safety guide is designed to cover general guidelines on the installation, use, and maintenance of Pneumatic Division Valves, FRLs (Filters pressure Regulators and Lubricators), Vacuum products and related accessory components.

1.2. Fail-Safe: Valves, FRLs, Vacuum products and their related components can and do fail without warning for many reasons. Design all systems and equipment in a fail-safe mode, so that failure of associated valves, FRLs or Vacuum products will not endanger persons or property.

1.3 Relevant International Standards: For a good guide to the application of a broad spectrum of pneumatic fluid power devices see: ISO 4414:1998, Pneumatic Fluid Power – General Rules Relating to Systems. See www.iso.org for ordering information.

1.4. Distribution: Provide a copy of this safety guide to each person that is responsible for selection, installation, or use of Valves, FRLs or Vacuum products. Do not select, or use Watts valves, FRLs or vacuum products without thoroughly reading and understanding this safety guide as well as the specific Watts publications for the products considered or selected.

1.5. User Responsibility: Due to the wide variety of operating conditions and applications for valves, FRLs, and vacuum products Watts and its distributors do not represent or warrant that any particular valve, FRL or vacuum product is suitable for any specific end use system. This safety guide does not analyze all technical parameters that must be considered in selecting a product. The user, through its own analysis and testing, is solely responsible for:

- Making the final selection of the appropriate valve, FRL, Vacuum component, or accessory.
- Assuring that all user's performance, endurance, maintenance, safety, and warning requirements are met and that the application presents no health or safety hazards.
- Complying with all existing warning labels and / or providing all appropriate health and safety warnings on the equipment on which the valves, FRLs or Vacuum products are used; and,
- Assuring compliance with all applicable government and industry standards.

1.6. Safety Devices: Safety devices should not be removed, or defeated.

1.7. Warning Labels: Warning labels should not be removed, painted over or otherwise obscured.

1.8. Additional Questions: Call the appropriate Watts technical service department if you have any questions or require any additional information. See the Watts publication for the product being considered or used, or call 269-629-5000, or go to www.wattsfluidair.com, for telephone numbers of the appropriate technical service department.

2. PRODUCT SELECTION INSTRUCTIONS

2.1. Flow Rate: The flow rate requirements of a system are frequently the primary consideration when designing any pneumatic system. System components need to be able to provide adequate flow and pressure for the desired application.

2.2. Pressure Rating: Never exceed the rated pressure of a product. Consult product labeling, Pneumatic Division catalogs or the instruction sheets supplied for maximum pressure ratings.

2.3. Temperature Rating: Never exceed the temperature rating of a product. Excessive heat can shorten the life expectancy of a product and result in complete product failure.

2.4. Environment: Many environmental conditions can affect the integrity and suitability of a product for a given application. Pneumatic Division products are designed for use in general purpose industrial applications. If these products are to be used in unusual circumstances such as direct sunlight and/or corrosive or caustic environments, such use can shorten the useful life and lead to premature failure of a product.

2.5. Lubrication and Compressor Carryover: Some modern synthetic oils can and will attack nitrile seals. If there is any possibility of synthetic oils or greases migrating into the pneumatic components check for compatibility with the seal materials used. Consult the factory or product literature for materials of construction.

2.6. Polycarbonate Bowls and Sight Glasses: To avoid potential polycarbonate bowl failures:

- Do not locate polycarbonate bowls or sight glasses in areas where they could be subject to direct sunlight, impact blow, or temperatures outside of the rated range.
- Do not expose or clean polycarbonate bowls with detergents, chlorinated hydro-carbons, keytones, esters or certain alcohols.
- Do not use polycarbonate bowls or sight glasses in air systems where compressors are lubricated with fire resistant fluids such as phosphate ester and di-ester lubricants.

Pneumatic Division
Richland, Michigan
www.wattsfluidair.com

2.7. Chemical Compatibility: For more information on plastic component chemical compatibility see Pneumatic Division technical bulletins Tec-3, Tec-4, and Tec-5

2.8. Product Rupture: Product rupture can cause death, serious personal injury, and property damage.
- Do not connect pressure regulators or other Pneumatic Division products to bottled gas cylinders.
- Do not exceed the maximum primary pressure rating of any pressure regulator or any system component.
- Consult product labeling or product literature for pressure rating limitations.

3. PRODUCT ASSEMBLY AND INSTALLATION INSTRUCTIONS

3.1. Component Inspection: Prior to assembly or installation a careful examination of the valves, FRLs or vacuum products must be performed. All components must be checked for correct style, size, and catalog number. DO NOT use any component that displays any signs of nonconformance.

3.2. Installation Instructions: Watts published Installation Instructions must be followed for installation of Watts valves, FRLs and vacuum components. These instructions are provided with every Watts valve or FRL sold, or by calling 269-629-5000, or at www.wattsfluidair.com.

3.3. Air Supply: The air supply or control medium supplied to Valves, FRLs and Vacuum components must be moisture-free if ambient temperature can drop below freezing

4. VALVE AND FRL MAINTENANCE AND REPLACEMENT INSTRUCTIONS

4.1. Maintenance: Even with proper selection and installation, valve, FRL and vacuum products service life may be significantly reduced without a continuing maintenance program. The severity of the application, risk potential from a component failure, and experience with any known failures in the application or in similar applications should determine the frequency of inspections and the servicing or replacement of Pneumatic Division products so that products are replaced before any failure occurs. A maintenance program must be established and followed by the user and, at minimum, must include instructions 4.2 through 4.10.

4.2. Installation and Service Instructions: Before attempting to service or replace any worn or damaged parts consult the appropriate Service Bulletin for the valve or FRL in question for the appropriate practices to service the unit in question. These Service and Installation Instructions are provided with every Watts valve and FRL sold, or are available by calling 269-629-5000, or by accessing the Watts web site at www.wattsfluidair.com.

4.3. Lockout / Tagout Procedures: Be sure to follow all required lockout and tagout procedures when servicing equipment. For more information see: OSHA Standard – 29 CFR, Part 1910.147, Appendix A, The Control of Hazardous Energy – (Lockout / Tagout)

4.4. Visual Inspection: Any of the following conditions requires immediate system shut down and replacement of worn or damaged components:
- Air leakage: Look and listen to see if there are any signs of visual damage to any of the components in the system. Leakage is an indication of worn or damaged components.
- Damaged or degraded components: Look to see if there are any visible signs of wear or component degradation.
- Kinked, crushed, or damaged hoses. Kinked hoses can result in restricted air flow and lead to unpredictable system behavior.
- Any observed improper system or component function: Immediately shut down the system and correct malfunction.
- Excessive dirt build-up: Dirt and clutter can mask potentially hazardous situations.

Caution: Leak detection solutions should be rinsed off after use.

4.5. Routine Maintenance Issues:
- Remove excessive dirt, grime and clutter from work areas.
- Make sure all required guards and shields are in place.

4.6. Functional Test: Before initiating automatic operation, operate the system manually to make sure all required functions operate properly and safely.

4.7. Service or Replacement Intervals: It is the user's responsibility to establish appropriate service intervals. Valves, FRLs and vacuum products contain components that age, harden, wear, and otherwise deteriorate over time. Environmental conditions can significantly accelerate this process. Valves, FRLs and vacuum components need to be serviced or replaced on routine intervals. Service intervals need to be established based on:
- Previous performance experiences.
- Government and / or industrial standards.
- When failures could result in unacceptable down time, equipment damage or personal injury risk.

4.8. Servicing or Replacing of any Worn or Damaged Parts: To avoid unpredictable system behavior that can cause death, personal injury and property damage:
- Follow all government, state and local safety and servicing practices prior to service including but not limited to all OSHA Lockout Tagout procedures (OSHA Standard – 29 CFR, Part 1910.147, Appendix A, The Control of Hazardous Energy – Lockout / Tagout).
- Disconnect electrical supply (when necessary) before installation, servicing, or conversion.
- Disconnect air supply and depressurize all air lines connected to system and Pneumatic Division products before installation, service, or conversion.
- Installation, servicing, and / or conversion of these products must be performed by knowledgeable personnel who understand how pneumatic products are to be applied.
- After installation, servicing, or conversions air and electrical supplies (when necessary) should be connected and the product tested for proper function and leakage. If audible leakage is present, or if the product does not operate properly, do not put product or system into use.
- Warnings and specifications on the product should not be covered or painted over. If masking is not possible, contact your local representative for replacement labels.

4.9. Putting Serviced System Back into Operation: Follow the guidelines above and all relevant Installation and Maintenance Instructions supplied with the valve FRL or vacuum component to insure proper function of the system.

Offer of Sale

The items described in this document and other documents or descriptions provided by Parker Hannifin Corporation, its subsidiaries and its authorized distributors, are hereby offered for sale at prices to be established by Parker Hannifin Corporation, its subsidiaries and its authorized distributors. This offer and its acceptance by any customer ("Buyer") shall be governed by all of the following Terms and Conditions. Buyer's order for any such item, when communicated to Parker Hannifin Corporation, its subsidiaries or an authorized distributor ("Seller") verbally or in writing, shall constitute acceptance of this offer.

1. Terms and Conditions of Sale: All descriptions, quotations, proposals, offers, acknowledgments, acceptances and sales of Seller's products are subject to and shall be governed exclusively by the terms and conditions stated herein. Buyer's acceptance of any offer to sell is limited to these terms and conditions. Any terms or conditions in addition to, or inconsistent with those stated herein, proposed by Buyer in any acceptance of an offer by Seller, are hereby objected to. No such additional, different or inconsistent terms and conditions shall become part of the contract between Buyer and Seller unless expressly accepted in writing by Seller. Seller's acceptance of any offer to purchase by Buyer is expressly conditional upon Buyer's assent to all the terms and conditions stated herein, including any terms in addition to, or inconsistent with those contained in Buyer's offer. Acceptance of Seller's products shall in all events constitute such assent.

2. Payment: Payment shall be made by Buyer net 30 days from the date of delivery of the items purchased hereunder. Amounts not timely paid shall bear interest at the maximum rate permitted by law for each month or portion thereof that the Buyer is late in making payment. Any claims by Buyer for omissions or shortages in a shipment shall be waived unless Seller receives notice thereof within 30 days after Buyer's receipt of the shipment.

3. Delivery: Unless otherwise provided on the face hereof, delivery shall be made F.O.B. Seller's plant. Regardless of the method of delivery, however, risk of loss shall pass to Buyer upon Seller's delivery to a carrier. Any delivery dates shown are approximate only and Seller shall have no liability for any delays in delivery.

4. Warranty: Seller warrants that the items sold hereunder shall be free from defects in material or workmanship for a period of 18 months from date of shipment from Parker Hannifin Corporation. THIS WARRANTY COMPRISES THE SOLE AND ENTIRE WARRANTY PERTAINING TO ITEMS PROVIDED HEREUNDER. SELLER MAKES NO OTHER WARRANTY, GUARANTEE, OR REPRESENTATION OF ANY KIND WHATSOEVER. ALL OTHER WARRANTIES, INCLUDING BUT NOT LIMITED TO, MERCHANTABILITY AND FITNESS FOR PURPOSE, WHETHER EXPRESS, IMPLIED, OR ARISING BY OPERATION OF LAW, TRADE USAGE, OR COURSE OF DEALING ARE HEREBY DISCLAIMED.

NOTWITHSTANDING THE FOREGOING, THERE ARE NO WARRANTIES WHATSOEVER ON ITEMS BUILT OR ACQUIRED WHOLLY OR PARTIALLY, TO BUYER'S DESIGN OR SPECIFICATIONS.

5. Limitation of Remedy: SELLER'S LIABILITY ARISING FROM OR IN ANY WAY CONNECTED WITH THE ITEMS SOLD OR THIS CONTRACT SHALL BE LIMITED EXCLUSIVELY TO REPAIR OR REPLACEMENT OF THE ITEMS SOLD OR REFUND OF THE PURCHASE PRICE PAID BY BUYER, AT SELLER'S SOLE OPTION. IN NO EVENT SHALL SELLER BE LIABLE FOR ANY INCIDENTAL, CONSEQUENTIAL OR SPECIAL DAMAGES OF ANY KIND OR NATURE WHATSOEVER, INCLUDING BUT NOT LIMITED TO LOST PROFITS ARISING FROM OR IN ANY WAY CONNECTED WITH THIS AGREEMENT OR ITEMS SOLD HEREUNDER, WHETHER ALLEGED TO ARISE FROM BREACH OF CONTRACT, EXPRESS OR IMPLIED WARRANTY, OR IN TORT, INCLUDING WITHOUT LIMITATION, NEGLIGENCE, FAILURE TO WARN OR STRICT LIABILITY.

6. Changes, Reschedules and Cancellations: Buyer may request to modify the designs or specifications for the items sold hereunder as well as the quantities and delivery dates thereof, or may request to cancel all or part of this order, however, no such requested modification or cancellation shall become part of the contract between Buyer and Seller unless accepted by Seller in a written amendment to this Agreement. Acceptance of any such requested modification or cancellation shall be at Seller's discretion, and shall be upon such terms and conditions as Seller may require.

7. Special Tooling: A tooling charge may be imposed for any special tooling, including without limitations, dies, fixtures, molds and patterns, acquired to manufacture items sold pursuant to this contract. Such special tooling shall be and remain Seller's property notwithstanding payment of any charges by Buyer. In no event will Buyer acquire any interest in apparatus belonging to Seller which is utilized in the manufacture of the items sold hereunder, even if such apparatus has been specially converted or adapted for such manufacture and notwithstanding any charges paid by Buyer. Unless otherwise agreed, Seller shall have the right to alter, discard or otherwise dispose of any special tooling or other property in its sole discretion at any time.

8. Buyer's Property: Any designs, tools, patterns, materials, drawings, confidential information or equipment furnished by Buyer, or any other items which become Buyer's property, may be considered obsolete and may be destroyed by Seller after two (2) consecutive years have elapsed without Buyer placing an order for the items which are manufactured using such property. Seller shall not be responsible for any loss or damage to such property while it is in Seller's possession or control.

9. Taxes: Unless otherwise indicated on the face hereof, all prices and charges are exclusive of excise, sales, use, property, occupational or like taxes which may be imposed by any taxing authority upon the manufacture, sale or delivery of the items sold hereunder. If any such taxes must be paid by Seller or if Seller is liable for the collection of such tax, the amount thereof shall be in addition to the amounts for the items sold. Buyer agrees to pay all such taxes or to reimburse Seller therefore upon receipt of its invoice. If Buyer claims exemption from any sales, use or other tax imposed by any taxing authority, Buyer shall save Seller harmless from and against any such tax, together with any interest or penalties thereon which may be assessed if the items are held to be taxable.

10. Indemnity For Infringement of Intellectual Property Rights: Seller shall have no liability for infringement of any patents, trademarks, copyrights, trade dress, trade secrets or similar rights except as provided in this Part 10. Seller will defend and indemnify Buyer against allegations of infringement of U.S. patents, U.S. trademarks, copyrights, trade dress and trade secrets (hereinafter "Intellectual Property Rights"). Seller will defend at its expense and will pay the cost of any settlement or damages awarded in an action brought against Buyer based on an allegation that an item sold pursuant to this contract infringes the Intellectual Property Rights of a third party. Seller's obligation to defend and indemnify Buyer is contingent on Buyer notifying Seller within ten (10) days after Buyer becomes aware of such allegations of infringement, and Seller having sole control over the defense of any allegations or actions including all negotiations for settlement or compromise. If an item sold hereunder is subject to a claim that it infringes the Intellectual Property Rights of a third party, Seller may, at its sole expense and option, procure for Buyer the right to continue using said item, replace or modify said item so as to make it noninfringing, or offer to accept return of said item and return the purchase price less a reasonable allowance for depreciation. Notwithstanding the foregoing, Seller shall have no liability for claims of infringement based on information provided by Buyer, or directed to items delivered hereunder for which the designs are specified in whole or part by Buyer, or infringements resulting from the modification, combination or use in a system of any item sold hereunder. The foregoing provisions of this Part 10 shall constitute Seller's sole and exclusive liability and Buyer's sole and exclusive remedy for infringement of Intellectual Property Rights.

If a claim is based on information provided by Buyer or if the design for an item delivered hereunder is specified in whole or in part by Buyer, Buyer shall defend and indemnify Seller for all costs, expenses or judgements resulting from any claim that such item infringes any patent, trademark, copyright, trade dress, trade secret or any similar right.

11. Force Majeure: Seller does not assume the risk of and shall not be liable for delay or failure to perform any of Seller's obligations by reason of circumstances beyond the reasonable control of Seller (hereinafter "Events of Force Majeure"). Events of Force Majeure shall include without limitation, accidents, acts of God, strikes or labor disputes, acts, laws, rules or regulations of any government or government agency, fires, floods, delays or failures in delivery of carriers or suppliers, shortages of materials and any other cause beyond Seller's control.

12. Entire Agreement/Governing Law: The terms and conditions set forth herein, together with any amendments, modifications and any different terms or conditions expressly accepted by Seller in writing, shall constitute the entire Agreement concerning the items sold, and there are no oral or other representations or agreements which pertain thereto. This Agreement shall be governed in all respects by the law of the State of Ohio. No actions arising out of sale of the items sold hereunder or this Agreement may be brought by either party more than two (2) years after the cause of action accrues.

Pneumatic Division
Richland, Michigan
www.wattsfluidair.com