





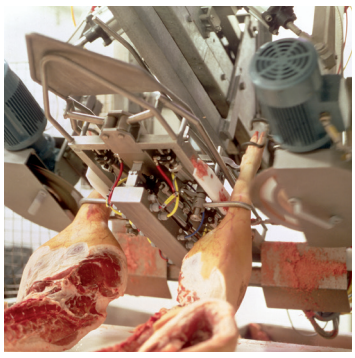



Air Motors

P1VAS Series Stainless Steel
0,12 to 1,6 kW

Catalogue PDE2554TCUK

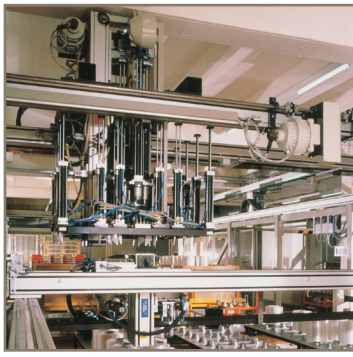

ENGINEERING YOUR SUCCESS.

Features	Air motor	Hydraulic motor	Electric motor
Overload safe	***	***	*
Increased torque at higher loads	***	**	*
Easy to limit torque	***	***	*
Easy to vary speed	***	***	*
Easy to limit power	***	***	*
Reliability	***	***	***
Robustness	***	***	*
Installation cost	***	*	**
Ease of service	***	**	*
Safety in damp environments	***	***	*
Safety in explosive atmospheres	***	***	*
Safety risk with electrical installations	***	***	*
Risk of oil leak	***	*	***
Hydraulic system required	***	*	***
Weight	**	***	*
Power density	**	***	*
High torque for size	**	***	*
Noise level during operation	*	***	**
Total energy consumption	*	**	***
Service interval	*	**	***
Compressor capacity required	*	***	***
Purchase price	*	*	***

* = good, ** = average, *** = excellent

Important
Before carrying out service activities, make sure the air motor is vented. Before disassembling the motor, disconnect the primary air hose to ensure that the air supply is interrupted.

Note
All technical data in the catalogue are typical values. The air quality is a major factor in the service life of the motor, see ISO 8573-1.

WARNING

FAILURE OR IMPROPER SELECTION OR IMPROPER USE OF THE PRODUCTS AND/OR SYSTEMS DESCRIBED HEREIN OR RELATED ITEMS CAN CAUSE DEATH, PERSONAL INJURY AND PROPERTY DAMAGE.
This document and other information from Parker Hannifin Corporation, its subsidiaries and authorized distributors provide product and/or system options for further investigation by users having technical expertise. It is important that you analyze all aspects of your application and review the information concerning the product or system in the current product catalog. Due to the variety of operating conditions and applications for these products or systems, the user, through its own analysis and testing, is solely responsible for making the final selection of the products and systems and assuring that all performance, safety and warning requirements of the application are met. The products described herein, including without limitation, product features, specifications, designs, availability and pricing, are subject to change by Parker Hannifin Corporation and its subsidiaries at any time without notice.

SALE CONDITIONS
The items described in this document are available for sale by Parker Hannifin Corporation, its subsidiaries or its authorized distributors. Any sale contract entered into by Parker will be governed by the provisions stated in Parker's standard terms and conditions of sale (copy available upon request).

Contents **Page**

General
The steps to size 4
Principles of Air Motors 5
Introduction ..... 6 - 9
Air quality & lubrification ..... 10 - 11
Air Motor features 12
P1VAS Air Motors series 13
Technical data 14
Material and technical specification 14
Choices of vanes 15
ATEX classes 15
Optimum working speed and torque range 15
Permitted shaft loadings 16

Stainless Steel Air Motors 120 to 1600 watts
Reversible air motor 120 watts 18
Dimensions 19
Reversible air motor 200 and 300 watts 20
Dimensions 21
Reversible air motor 600, 900 & 1600 watts 22
Dimensions 600 watts 23
Dimensions 900 watts 24
Dimensions 1600 watts 25
Lubrication and service life 26
Service kits 27
Order key code 28

Choosing the correct air motor for your application

1 Which drive principle of the air motor is suitable for your application?

- Air vane motor are suitable for regular operating cycles, speed is very small e.g. 16 rpm
- Tooth gear air motor or turbines are more suitable for continuous operation, 24 hours non-stop, speed is in a upper range, up to 140,000 rpm
- Oil free operation is often an option for these three principles of air motors.

2 Which motor materials are suitable for your application?

- Will the air motor work in a normal production area
- Or in a paper industry
- Or in the food processing industry, in contact or not with food
- Or in underwater usage
- Or in the medical, pharmaceutical industries
- Or in potentially explosive areas
- Others, please describe your environment

3 How do you calculate the motor power taking the application conditions into consideration?

1. Which rotational direction? Clockwise, anti-clockwise, reversible?
2. Air pressure working range? Which air class quality is available?
3. Which torque and which speed under load do you expect to obtain?
4. Calculate the basic power with the formula

   P = M x n / 9550 with P power output in kW, M nominal torque in Nm, n nominal speed in rpm

5. Check performance data of air motors in our catalogues. Note that all data is at 6 bar in the inlet of the air motor, max 3 meters for tubes and oil lubricated operations.
6. To adapt the difference of air pressure with your operation conditions, please check graphs in our catalogues and how to do it.
7. or you can adapt the need of air to fit your operation conditions by throttling the outlet flow in the air motor you will reduce speed without loss of torque.
8. Check if you need an oil free or not working operation. 1 to 2 drops of oil per cube meter are needed to optimize performance and life time of air motors. Oil free operation will decrease by 10 to 15% the performance of air motors.

4 How do you integrate your air motor in your system?

- In which position is the air motor used?
- Do you need to use a brake?
- Do you want to use your own gear box and put it somewhere else in the machine?
- Do you need extra components like fittings, tubes, valves and FRLs?

5 How do you ensure a long life and high performance of the air motor?

- Ensure you air quality is in accordance with our specifications, oil or oil free lubrication operations.
- Keep the recommended maintenance intervals

6 How do you determine the purchasing and running costs after the air motor installation?

- Keep same level of your air quality.

Principles of motor functioning

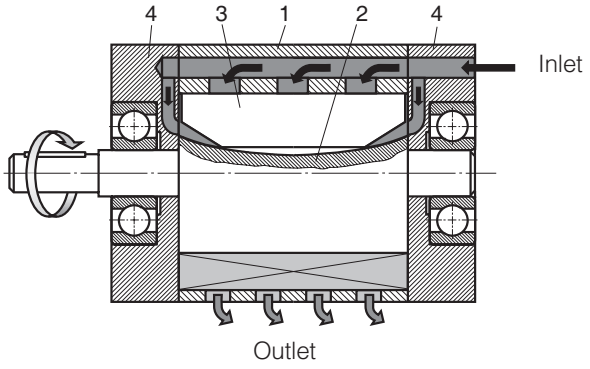

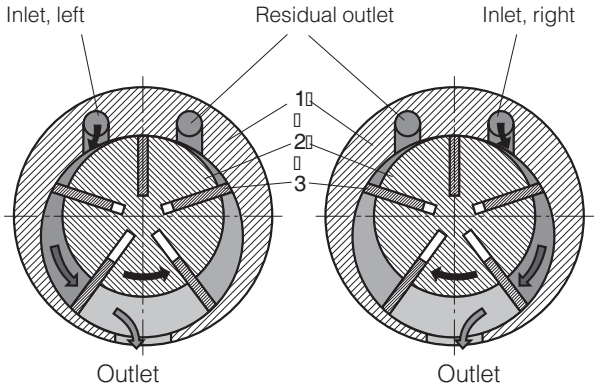

1	Rotor cylinder
2	Rotor
3	Vanes
4	End piece with bearing

Torque, power and air consumption Graphs

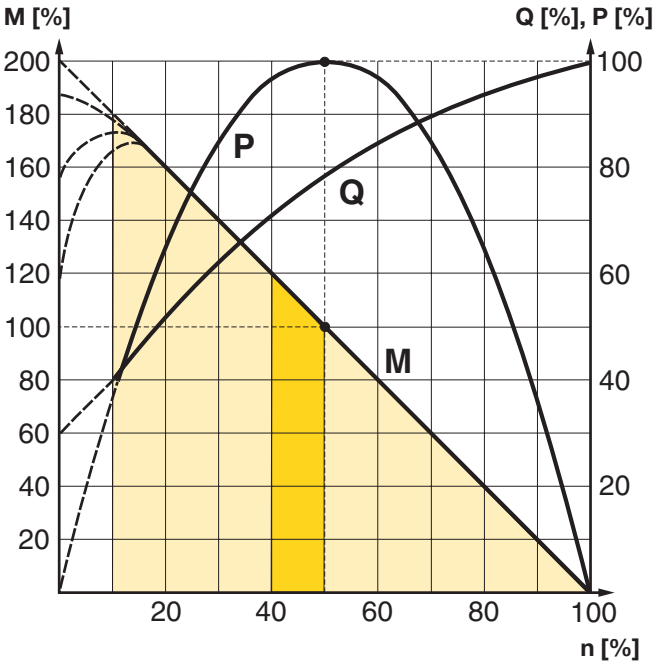

The curve is for 6 bar
P = power **Q = air consumption**
M = torque **n = speed**

Possible working range of motor.

Optimum working range of motor.
Higher speeds = more vane wear
Lower speeds with high torque = more gearbox wear

There are a number of air motor designs, Parker has chosen the vane rotor design due to its simplicity and reliable operation. Plus the small external dimensions of vane motors make them suitable for all applications.

The principle of the vane motor is that a rotor with a number of vanes is enclosed in a rotor cylinder. Compressed air is supplied through one connection and air escapes from the other.

For reliable starting, the springs press the vanes against the rotor cylinder and the air pressure always bears at right angles against a surface. This means that the resulting torque of the motor is due to the vane surfaces and the air pressure.

The performance characteristics of each motor are shown in a family of curves as above, from which torque, power and air consumption can be read off as a function of speed. Power is zero when the motor is stationary and also when running at free speed (100%) with no load. Maximum power (100%) is normally developed when the motor is driving a load at approximately half the free speed (50%).
Torque at free speed is zero, but increases as soon as a load is applied, rising linearly until the motor stalls. As the motor can then stop with the vanes in various positions, it is not possible to specify an exact torque. However, a minimum starting torque is shown in all tables.
Air consumption is greatest at free speed, and decreases with decreasing speed, as shown in the above diagram.

Performance

The performance of an air motor is dependent on the inlet pressure. At a constant inlet pressure, air motors exhibit the characteristic linear output torque / speed relationship. However, by simply regulating the air supply, using the techniques of throttling or pressure regulation, the output of an air motor can easily be modified. The most economical operation of an air motor (least wear, least air consumption, etc.) is reached by running close to nominal speed. By torque of M = 0, the maximum speed (idle speed) is reached. Shortly before standstill (n - 0), the air motor reaches its maximum torque (Mmax = 2 x Mo). At nominal speed (nn), for example in the middle of the speed range, air motor reaches its maximum power output (Pmax).

Energy Efficiency

A pneumatic motor achieves its maximum power when it is operating as close as possible to its rated speed (50% of the rated idle speed). The energy balance is best in this area, because the compressed air is used efficiently.

Air pressure correction factors

To adapt the difference of air pressure with your operation conditions

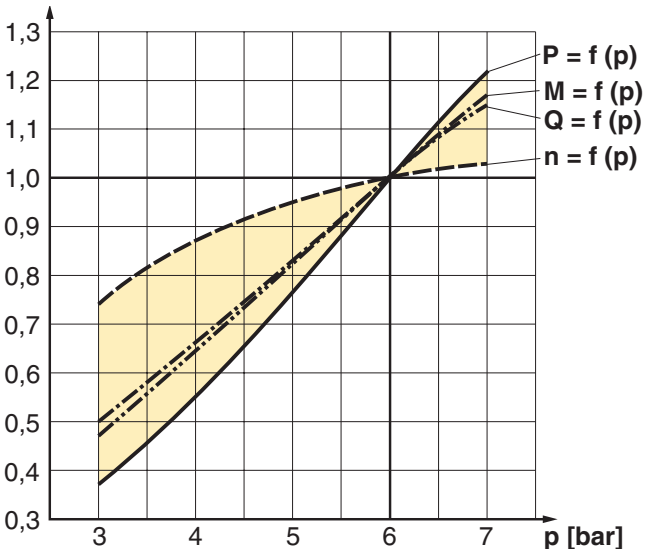

P = Power, M = Torque, Q = Air consumption, N = Speed

Pressure [p] bar / PSI	Power [P] %	Speed [n] %	Troque [M] %	Air Consump. [Q] %
7 / 99	121	103	117	117
6 / 85	100	100	100	100
5 / 71	77	95	83	83
4 / 57	55	87	67	67
3 / 42	37	74	50	50

All catalogue data and curves are specified at a supply pressure of 6 bar to the motor. This diagram shows the effect of pressure on speed, specified torque, power and air consumption.
Start off on the curve at the pressure used and then look up to the lines for power, torque and air consumption. Read off the correction factor on the Y axis for each curve and multiply this by the specified catalogue data in the table, or data read from the torque and power graphs.
Example: at 4 bar supply pressure, the power is only 0.55 x power at 6 bar supply pressure. This example shows how strongly power falls if supply pressure is reduced. You must therefore ensure that the motor is supplied through pipes of sufficient diameter to avoid pressure drop.

The speed and torque can also be regulated by installing a pressure regulator in the inlet pipe. This means that the motor is constantly supplied with air at lower pressure, which means that when the motor is braked, it develops a lower torque on the output shaft.

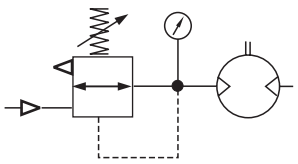

Pressure regulation at motor inlet.

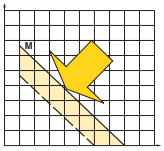

Theoretically torque curve change caused by pressure change

Speed regulation, air flow reduction

Every size reduction or restriction on the air line, whether of the supply hose itself or fittings, before the air motor affects the amount of the supplied air. By throttling you reduce the speed of your motor and simultaneously, the required torque. That means that you reduce the motor performance. The most common way to reduce the speed of a motor is to install a flow control valve in the air outlet, you can set the speed without loss of the torque. When the motor is used in applications where it must reverse and it is necessary to restrict the speed in both directions, flow control valves with by-pass should be used in both directions. If the inlet air is restricted, the air supply is restricted and the free speed of the motor falls, but there is full pressure on the vanes at low speeds. This means that we get full torque from the motor at low speeds despite the low air flow. Since the torque curve becomes "steeper". this also means that we get a lower torque at any given speed than would be developed at full air flow. The benefit of throttling the inlet is that air consumption is reduced, whereas throttling the exhaust air maintains a slightly higher starting torque.

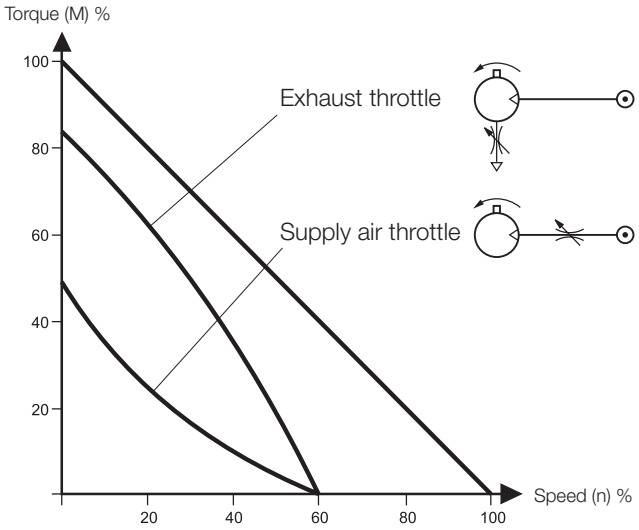

Throttling

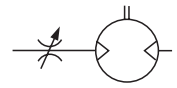

Supply or exhaust throttling, non-reversible motor

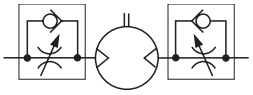

Supply throttling, reversible motor

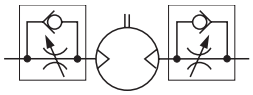

Exhaust throttling, reversible motor

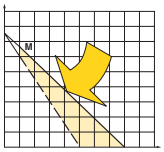

Theoretically torque curve change caused by throttling

Component choice for air supply

Direction of motor rotation

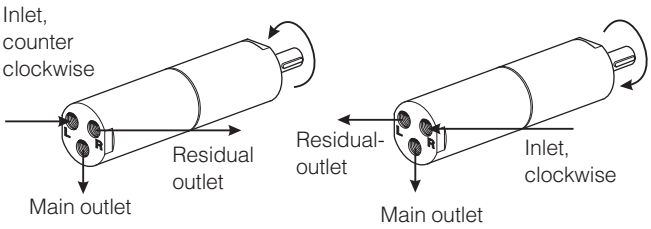

The direction of rotation of reversible motors is controlled by supplying inlet L or inlet R with compressed air. Air motors can be stopped and started continually without damage.

As the motor begins to rotate air is trapped between the vanes and is compressed. This air is exhausted through the exhaust port. As the rotor continues it's rotation, trapped air is compressed and exhausted through the residual port. If this air is not exhausted, the motor will be braked and maximum power will not be obtained.

Compressed air quality

Oil and oil mist are avoided whenever possible to ensure a clean work environment. In addition, purchasing, installation and maintenance of oil equipment can be expensive. All users in all industries now try to avoid using components which have to be lubricated. The P1V air motors series are equipped with vanes for intermittent lubrication free operation as standard, which is the most common application of air motors.

Dry unlubricated compressed air

If unlubricated compressed air is used, the compressed air should comply with the purity standards below in order to guarantee the longest possible overall service life. If the unlubricated compressed air has a high water content, condensation forms inside the motor, causing corrosion in all internal components. A ball bearing can be destroyed in a remarkably short time if it comes into contact with a single water droplet. For indoor use, we recommend ISO8573-1 purity class 3.4.1. To achieve this, compressors must befitted with after coolers, oil filters, refrigerant air dryers and air filters. For indoor/outdoor use, we recommend ISO8573-1 purity class 1.2.1.
To achieve this, compressors must be fitted with after coolers, oil filters, adsorption dryers and dust filters.

Oil mist

If oil mist is used (approx. 1 drop of oil per m3 of compressed air), the oil not only acts as a lubricant but also protects against corrosion. This means that compressed air with a certain water content may be used without causing corrosion problems inside the motor. ISO8573-1 purity class 3.-.5 may be used without difficulty. The following oils are recommended for use in the food stuffs industry: Shell Cassida Fluid HF 32 or Klüberoil 4 UH 1-32

ISO 8573-1 purity classes

Quality class	Contaminants		Water	Oil
	particle size	max. concentration	max. pressure dew point	max. concentration
	(µm)	(mg/m³)	(°C)	(mg.m³)
1	0.1	0.1	-70	0.01
2	1	1	-40	0.1
3	5	5	-20	1.0
4	15	8	+3	5.0
5	40	10	+7	25
6	-	-	+10	-

For example: compressed air to purity class 3.4.3. This means a 5 µm filter (standard filter), dew point +3°C (refrigerant cooled) and an oil concentration of 1,0 mg oil/m3 (as supplied by a standard compressor with a standard filter).

Air supply

Since the supply pressure at the air motor inlet port is of considerable importance for obtaining the power, speed and torque quoted in the catalogue, the recommendations below should be observed.

The following data must be complied with:

- Supply pressure: 7 bar
- Regulator pressure setting: 6.7 bar
- Pipe length between air treatment unit and valve: max. 1 m
- Pipe length valve and air motor: max 2 m

The pressure drop through the air preparation unit, pipe, valve means that 6 bar pressure is obtained at the motor supply port. Please refer to the correction diagram and factors to see what lower supply pressure means for power, speed and torque.

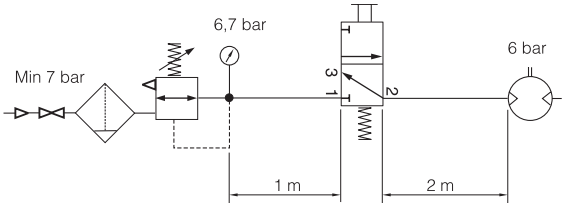

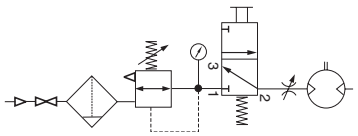

Shut-off, filtering, pressure regulation and control valve

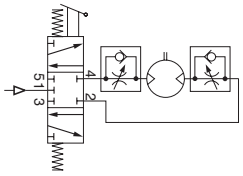

Reversible motor with 5/3 control valve

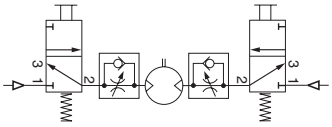

Reversible motor with two 3/2 control valves

The air with which the motor is supplied must be filtered and regulated. Directional valves are needed to provide it with air, to get the motor to rotate when we want it to. These valves can be equipped with several means of actuation, such as electric, manual and pneumatic control. When the motor is used in a non-reversible application, it is sufficient to use a 2/2 or 3/2 valve function for supply. Either one 5/3 or two 3/2 valves functions are needed for a reversible motor, to ensure that the motor receives compressed air and the residual air outlet is vented. A flow control valve can be installed in the supply pipe to regulate the motor speed if the motor is not used as a reversible motor.
One flow control valve with by-pass is needed to regulate each direction of rotation if the motor is used as a reversible motor. The built-in check valve will then allow air from the residual air outlet to escape through the outlet port in the control valve. The compressed air supply must have sufficiently large pipes and valves to give the motor the maximum power. The motor needs 6 bar at the supply port all the time. For example, a reduction of pressure to 5 bar reduces the power developed to 77% and to 55% at 4 bar!

Silencing

Exhaust silencer

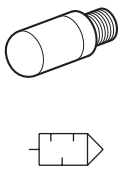

Central silencer

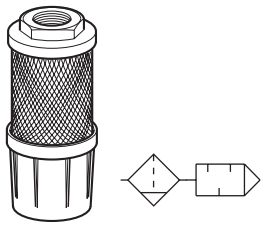

The noise from an air motor consists of both mechanical noise and a pulsating noise from the air flowing out of the outlet. The installation of the motor has a considerable effect on mechanical noise. It should be installed so that no mechanical resonance effects can occur. The outlet air creates a noise level which can amount to 115 dB(A) if the air is allowed to exhaust freely into the atmosphere. Various types of exhaust silencers are used to reduce this level. The most common type screws directly onto the exhaust port of the motor. Since the motor function causes the exhaust air to pulsate, it is a good idea to allow the air to exhaust into some kind of chamber first, which reduces the pulsations before they reach the silencer. The best silencing method is to connect a soft plastic hose to a large central silencer with the largest possible area, to reduce the speed of the out-flowing air as far as possible.

NOTE! Remember that if a silencer which is too small or is blocked, generates back pressure on the outlet side of the motor, which reduces the motor power.

CE marking

The air motors are supplied as “Components for installation” – the installer is responsible for ensuring that the motors are installed safely in the overall system. Parker Pneumatic guarantees that its products are safe, and as a supplier of pneumatic equipment we ensure that the equipment is designed and manufactured in accordance with the applicable EU directive.

Most of our products are classed as components as defined by various directives, and although we guarantee that the components satisfy the fundamental safety requirements of the directives to the extent that they are our responsibility, they do not usually carry the CE mark. Nevertheless, most P1VAS motors carry the CE mark because they are ATEX certified (for use in explosive atmospheres).

The following are the currently applicable directives:

- Machinery Directive(essential health and safety requirements relating to the design and structure of machines and safety components)
- EMC Directive
- Simple Pressure Vessels Directive
- Low Voltage Directive
- ATEX Directive (ATEX = ATmosphere EXplosive)

Torque, power and air consumption graphs

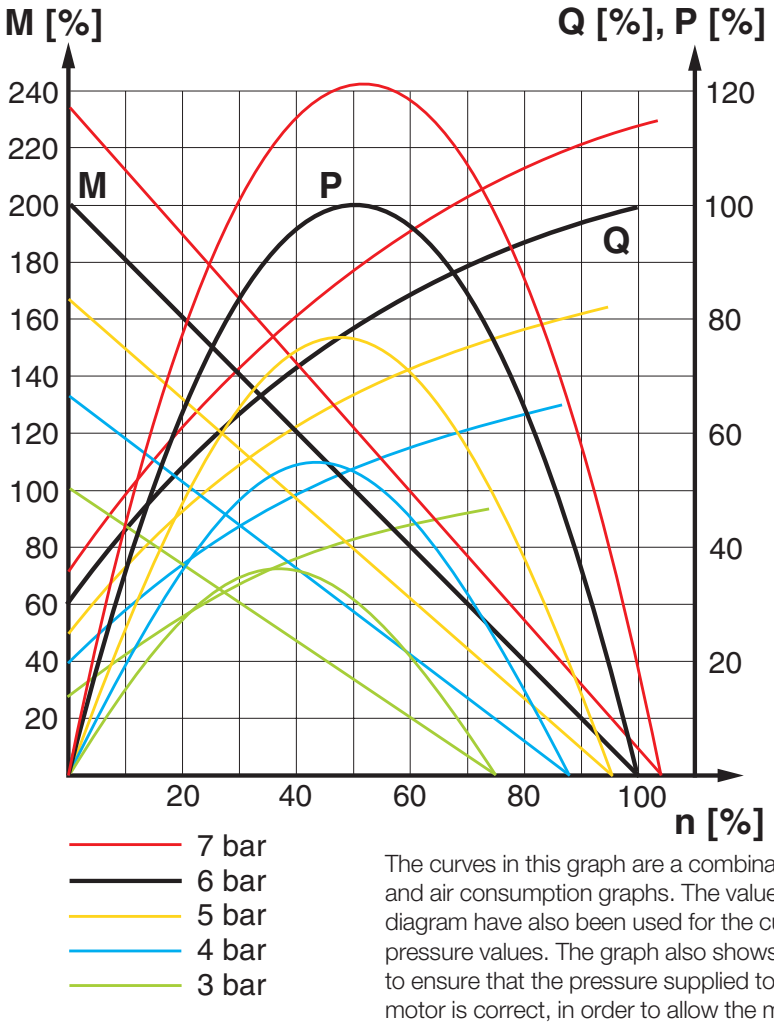

P = power **Q = air consumption**
M = torque **n = speed**

The curves in this graph are a combination of the torque, power and air consumption graphs. The values from the correction diagram have also been used for the curves for the different pressure values. The graph also shows that is it very important to ensure that the pressure supplied to the inlet port of the motor is correct, in order to allow the motor to work at maximum capacity. If the valve supplying a large motor is too small or if the supply line is underspecified, the pressure at the inlet port may be so low that the motor is unable to do its work. One solution would be to upgrade the valve and supply system, or alternatively you could replace the motor with a smaller motor with lower air consumption. The result would be increased pressure at the inlet port, which means that the smaller motor could carry out the necessary work. However, you may need to select a smaller motor with a lower free speed in order to obtain sufficient torque at the outgoing shaft.

Then check the characteristic graph of each motor to find more accurate technical data. Always select a motor where the data required is in the orange field. Also use the correction diagram to see what it would mean to use different air supply pressures or different air flow in the motor.

Tip: Select a motor which is slightly too fast and powerful, regulate its speed and torque with a pressure regulator and/or restriction to achieve the optimum working point.

Do you need any support to select the right air motor, please feel free to consult your local sales office.

Choice of an air motor, general

The motor to be used should be selected by starting with the torque needed at a specific spindle speed. In other words, to choose the right motor, you have to know the required speed and torque. Since maximum power is reached at half the motor's free speed, the motor should be chosen so that the point aimed at is as close as possible to the maximum power of the motor.
The design principle of the motor means that higher torque is generated when it is braked, which tends to increase the speed. This means that
the motor has a kind of speed selfregulation function built in. Use the following graph to choose the correct motor size and the correct type of gear as appropriate. The graph contains the points for the maximum torque of each motor at maximum power. Put in your point on the graph and select a marked point above and to the right of the point you need.

Specifying air quality (purity) in accordance with ISO8573-1:2010, the international standard for compressed air quality

ISO8573-1 is the primary document used from the ISO8573 series as it is this document which specifies the amount of contamination allowed in each cubic metre of compressed air.

ISO8573-1 lists the main contaminants as Solid Particulate, Water and Oil. The purity levels for each contaminant are shown separately in tabular form, however for ease of use, this document combines all three contaminants into one easy to use table.

ISO8573-1:2010 CLASS	Solid Particulate				Water		Oil
	Maximum number of particles per m^3			Mass Concentration mg/m^3	Vapour Pressure Dewpoint	Liquid g/m^3	Total Oil (aerosol liquid and vapour) mg/m^3
	0,1 - 0,5 micron	0,5 - 1 micron	1 - 5 micron				
0	As specified by the equipment user or supplier and more stringent than Class 1						
1	≤ 20 000	≤ 400	≤ 10	-	≤ -70 °C	-	0,01
2	≤ 400 000	≤ 6 000	≤ 100	-	≤ -40 °C	-	0,1
3	-	≤ 90 000	≤ 1 000	-	≤ -20 °C	-	1
4	-	-	≤ 10 000	-	≤ +3 °C	-	5
5	-	-	≤ 100 000	-	≤ +7 °C	-	-
6	-	-	-	≤ 5	≤ +10 °C	-	-
7	-	-	-	5 - 10	-	≤ 0,5	-
8	-	-	-	-	-	0,5 - 5	-
9	-	-	-	-	-	5 - 10	-
X	-	-	-	> 10	-	> 10	> 10

Specifying air purity in accordance with ISO8573-1:2010
When specifying the purity of air required, the standard must always be referenced, followed by the purity class selected for each contaminant (a different purity class can be selected for each contamination if required).
An example of how to write an air quality specification is shown below:

ISO 8573-1:2010 Class 1.2.1
ISO 8573-1:2010 refers to the standard document and its revision, the three digits refer to the purity classifications selected for solid particulate, water and total oil. Selecting an air purity class of 1.2.1 would specify the following air quality when operating at the standard's reference conditions:

Class 1 - Particulate
In each cubic metre of compressed air, the particulate count should not exceed 20,000 particles in the 0.1 - 0.5 micron size range, 400 particles in the 0.5 - 1 micron size range and 10 particles in the 1 - 5 micron size range.

Class 2 - Water
A pressure dewpoint (PDP) of -40°C or better is required and no liquid water is allowed.

Class 1 - Oil
In each cubic metre of compressed air, not more than 0.01mg of oil is allowed. This is a total level for liquid oil, oil aerosol and oil vapour.

ISO8573-1:2010 Class zero
- **Class 0 does not mean zero contamination.**
- **Class 0 requires the user and the equipment manufacturer to agree contamination levels as part of a written specification.**
- **The agreed contamination levels for a Class 0 specification should be within the measurement capabilities of the test equipment and test methods shown in ISO8573 Pt 2 to Pt 9.**
- **The agreed Class 0 specification must be written on all documentation to be in accordance with the standard.**
- **Stating Class 0 without the agreed specification is meaningless and not in accordance with the standard.**
- **A number of compressor manufacturers claim that the delivered air from their oil-free compressors is in compliance with Class 0.**
- **If the compressor was tested in clean room conditions, the contamination detected at the outlet will be minimal. Should the same compressor now be installed in typical urban environment, the level of contamination will be dependent upon what is drawn into the compressor intake, rendering the Class 0 claim invalid.**
- **A compressor delivering air to Class 0 will still require purification equipment in both the compressor room and at the point of use for the Class 0 purity to be maintained at the application.**
- **Air for critical applications such as breathing, medical, food, etc typically only requires air quality to Class 2.2.1 or Class 2.1.1.**
- **Purification of air to meet a Class 0 specification is only cost effective if carried out at the point of use.**

Maximise Your Air Motor Application with the P3X Lite

The P3X Lite air preparation system is constructed from ultra light weight technopolymers instead of the traditional aluminium or zinc die cast, making it 45% lighter than conventional units.

This non-metal construction also means that the P3X Lite is corrosion free enabling it to be used in harsh industrial environments where anti freeze or aggressive synthetic oils are present.

The use of technopolymers in the design of P3X Lite has facilitated a universal body design, this has resulted in reducing the number of variants required to cover the full spectrum of applications. This can dramatically lower logistic costs and simplify stock holding for customers making the P3X Lite a very cost effective solution.



Nano Mist

Nano Mist Technology
Self-Adjusting Lubricator

With conventional lubricators, only the oil volume per time unit can be adjusted. If the demand changes, the quantity move to be on one line, not split in two still remains constant.

The P3X Lite lubricator concept sets new benchmarks here. For the first time, the oil volume is automatically adjusted to the flow rate. This ensures that there is neither too little nor too much oil in the system, which leads to clear economic and ecological advantages.

In addition, with conventional systems, the distance between the lubricator and the equipment has to be less than 8 meters. With larger distances, the dispensed oil is deposited as a wall flow.
The new lubricator principle of the P3X Lite allows for distances of up to 40 meters. This opens up new scope for the design of even more efficient production systems.

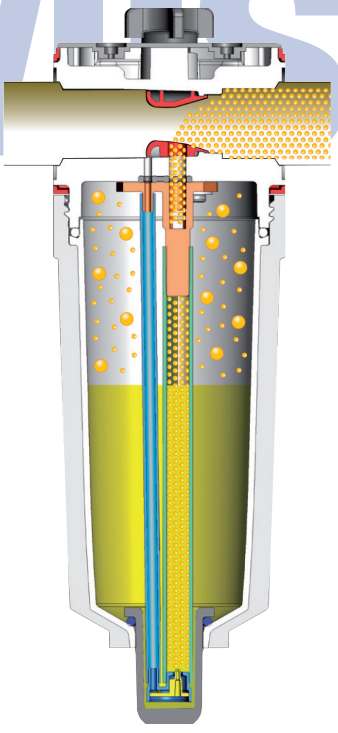

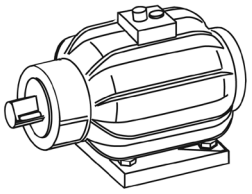

Air motors have much smaller installation dimensions than corresponding electric motors.

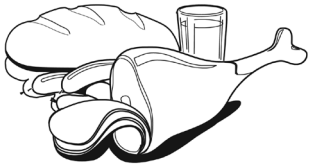

The shape, design and non-lubricated operation allow the motor to be suitable for use in the food industry.

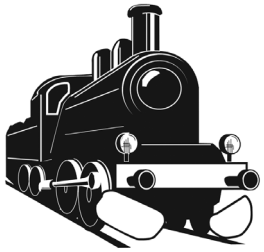

Air motors can be loaded until they stall, without damage. They are designed to be able to withstand the toughest heat, vibration, impact etc.

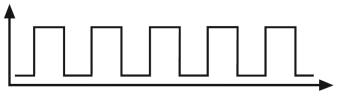

Air motors can be stopped and started continually without damage.

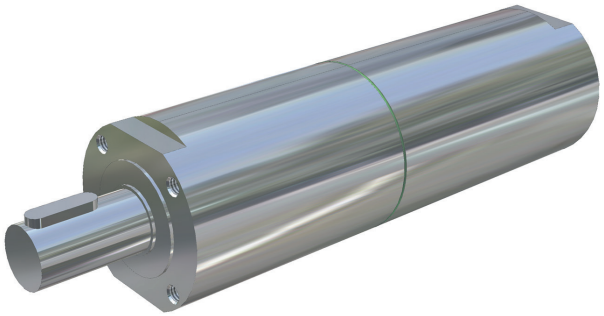



The weight of an air motor is several times less than corresponding electric motors.

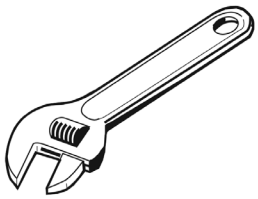

The simple design principle of air motors makes them very easy to service.

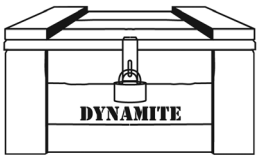

Air motors can be used in the harshest environments. Most P1VAS motors are ATEX certified.

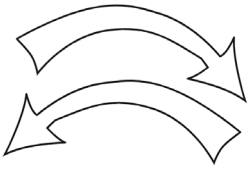

The motors are reversible as standard.



The choice of materials means that they can be used in damp and aggressive environments.

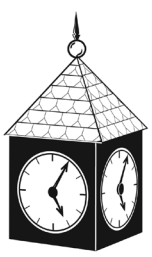

The reliability of air motors is very high, thanks to the design and the low number of moving parts.

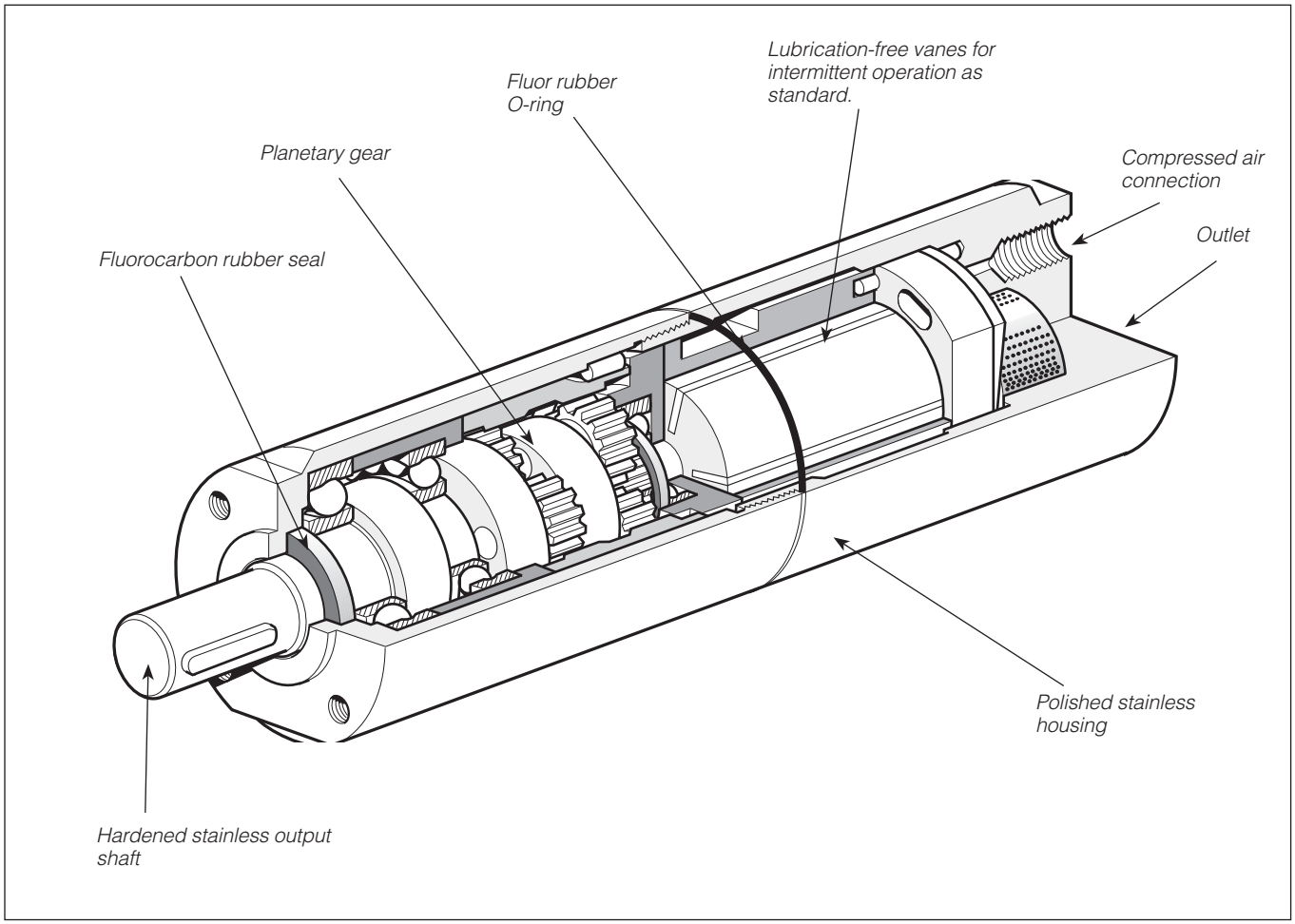

Stainless Steel Air Motors

P1VAS is a range of air motors with all external components made of stainless steel, which means that they can be used in food grade applications, and in all other applications where there is a risk of corrosion.

The range contains seven different sizes, with power ranging from 120 to 1 600 Watts, and speeds from 50 to 22 000 rpm. The air motor and planetary reduction gear are built into a polished stainless steel housing, which is sealed by a fluorocarbon rubber O-ring. The output shaft, which is made of polished stainless steel, is also sealed by a fluorocarbon rubber seal .

Consideration for achieving a clean, hygienic design was given early on in the development of this range of air motors. Thanks to the cylindrical shape, there are no pockets which can accumulate dirt or bacteria. Additionally, the two halves of the motor body are sealed with an o-ring to prevent contamination. The choice of materials reflects the fact that aggressive cleaning materials are used in food grade applications.

The P1VAS series is designed to be operated in intermittent intervals under non-lubrication conditions. For this reason, no particles of lubricant escape with the exhaust air and the service costs are reduced. This means that the motors can be used directly in food grade applications. The planetary gear, which has one or more reduction stages, is lubricated with an USDA-H1 standard grease, approved for use in food grade applications.

Technical data

Note:
All technical data are based on a working pressure of 6 bar and with oil. Speed tolerance accuracy in between clock and anti-clockwise directions is ±10%.

Air motor size & type	P1VAS012	P1VAS020	P1VAS030	P1VAS060	P1VAS090	P1VAS160
Nominal power (watts)	120	200	300	600	900	1600
Working pressure (bar)	3 to 7, 6 in explosive atmosphere					
Working temperature (°C)	-20 to +110					
Ambient temperature (°C)	-20 to +40 in explosive atmosphere					
Air flow required (Nl/min)	300	370	470	850	1400	1600
Min pipe ID, inlet (mm)	6	10	10	12	12	19
Min pipe ID, outlet (mm)	6	10	10	12	12	19
Choice of treatment unit: recommended min air flow (l/min) at p1 7.5 bar and 0.8 bar pressure drop						
	340	410	510	900	1500	1800
Medium	40µm filtered, oil mist or dry unlubricated compressed air					
Oil free operation, indoor	ISO8573-1 purity class 3.4.1					
Oil free operation, outdoor	ISO8573-1 purity class 1.2.1					
Oil operation	1-2 drop per cube meter, ISO8573-1 purity class 3.-.5					
Recommended oil	Foodstuffs industry Klüber oil 4 UH1- 32 N					
Choice of valve: recommended min nominal air flow (l/min) at p1 6 bar and 1 bar pressure drop						
	380	450	550	950	1600	2000
Sound level free outlet (dB(A))	99	100	103	103	106	108
With outlet silencer (dB(A))	92	82	91	94	88	95
Exhaust air removed with pipes to another room	70	71	70	76	80	87

Note:
sound levels are measured at free speed with the measuring instrument positioned 1 meter away from the air motor at an height of 1 meter.

Material specification

Air motor size & type	P1VAS012	P1VAS020	P1VAS030	P1VAS060	P1VAS090	P1VAS160
Planetary gearbox housing	Stainless Steel					
Air motor housing	Stainless steel					
Shaft	Hardened stainless steel					
Key	Hardened stainless steel					
External seal Fluor rubber	Fluor rubber FPM					
Internal steel parts	High grade steel (not stainless)					
Planetary gear grease used in	Grease, Shell Cassida RLS2					
Screws in housing in last planet stage	Surface treated steel					

Accessories	P1V
Flange bracket	Stainless steel
Foot bracket	Stainless steel
Screws for the mountings	Stainless steel DIN A2

P1VAS - Stainless Steel Air Motors

Choice of vanes

0 = Standard vanes	C = Vanes for continuous lubrication-free operation	Z = Standard spring loaded vanes
These motors are for the vane type for intermittent lubrication-free operation. They can operate 70% of the time for up to 15 minutes without lubrication. With lubrication, these motors can operate 100% of the time.	This motor is equipped with vanes for continuous lubrication-free operation. (To obtain the longest possible service life, we recommend no oil in the air.)	All vanes are spring loaded to ensure that they remain pressed against the cylinder when the motor stops. The spring loaded vane option also prevents the vanes from sliding down in their track if vibration is introduced. The spring loaded vanes therefore provide a higher starting torque, improved starting and low speed characteristics, because the leakage over the vanes is reduced to a minimum.

Refer to the model code on page 27 for ordering vanes with option C or Z.

ATEX Classes

T6 | T80°C	II 2G Ex h IIC T6 Gb X II 2D Ex h IIIC T80°C Db X
T5 | 95°C	II 2G Ex h IIC T5 Gb X II 2D Ex h IIIC T95°C Db X
T4 | T130°C	II 2G Ex h IIC T4 Gb X II 2D Ex h IIIC T130°C Db X
T3 | T195°C	II 2G Ex h IIC T3 Gb X II 2D Ex h IIIC T195°C Db X

Optimum working speed and torque range

"The performance characteristics of each motor are normally shown in a family of curves, from which torque, power and air consumption can be read off as a function of speed.
Power is zero when the motor is stationary and also when running at free speed (100%) with no load. Maximum power (100%) is normally developed when the motor is driving a load at approximately half the free speed (50%). Torque at free speed is zero, but increases as soon as a load is applied, rising linearly until the motor stalls. As the motor can then stop with the vanes in various positions, it is not possible to specify an exact torque. However, a minimum starting torque is shown in all tables in next pages for each air motor size. Air consumption is greatest at free speed, and decreases with decreasing speed."

	6 bar	
Order Code	**Speed range [rpm]**	**Torque range [Nm]**
P1VAS012A*N00	8800 to 11000	0,12 to 0,1
P1VAS012A*550	2200 to 2750	0,46 to 0,4
P1VAS012A*360	1440 to 1800	0,69 to 0,6
P1VAS012A*140	560 to 700	1,84 to 1,6
P1VAS012A*090	360 to 450	2,88 to 2,5
P1VAS012A*060	240 to 300	4,37 to 3,8
P1VAS012A*010	-	-
P1VAS020A*G00	6400 to 8000	0,28 to 0,24
P1VAS020A*460	1840 to 2300	0,92 to 0,8
P1VAS020A*240	960 to 1200	1,84 to 1,6
P1VAS020A*140	560 to 700	3,11 to 2,7
P1VAS020A*070	280 to 350	6,21 to 5,4
P1VAS020A*036	144 to 180	12,19 to 10,6
P1VAS020A*018	72 to 90	12,08 to 10,5
P1VAS020A*005	-	-
P1VAS030A*E50	5800 to 7250	0,46 to 0,4
P1VAS030A*460	1840 to 2300	1,38 to 1,2
P1VAS030A*240	960 to 1200	2,76 to 2,4
P1VAS030A*123	492 to 615	5,35 to 4,65
P1VAS030A*070	280 to 350	9,37 to 8,15
P1VAS030A*036	144 to 180	18,29 to 15,9
P1VAS030A*018	72 to 90	15,87 to 13,8
P1VAS030A*010	-	-
P1VAS030A*005	-	-

	6 bar	
Order Code	**Speed range [rpm]**	**Torque range [Nm]**
P1VAS060A*D50	5400 to 6750	0,98 to 0,85
P1VAS060A*550	2200 to 2750	2,3 to 2
P1VAS060A*400	1600 to 2000	3,22 to 2,8
P1VAS060A*300	1200 to 1500	4,37 to 3,8
P1VAS060A*200	800 to 1000	6,56 to 5,7
P1VAS060A*070	280 to 350	18,75 to 16,3
P1VAS060A*050	200 to 250	26,34 to 22,9
P1VAS060A*034	136 to 170	38,76 to 33,7
P1VAS060A*018	72 to 90	36,57 to 31,8
P1VAS090A*C60	5040 to 6300	1,55 to 1,35
P1VAS090A*520	2080 to 2600	3,8 to 3,3
P1VAS090A*367	1468 to 1835	5,29 to 4,6
P1VAS090A*285	1140 to 1425	6,9 to 6
P1VAS090A*190	760 to 950	10,35 to 9
P1VAS090A*065	260 to 325	30,36 to 26,4
P1VAS090A*047	188 to 235	41,98 to 36,5
P1VAS090A*031	124 to 155	63,71 to 55,4
P1VAS160A*960	3840 to 4800	3,57 to 3,1
P1VAS160A*250	1000 to 1250	14,03 to 12,2
P1VAS160A*120	480 to 600	29,21 to 25,4
P1VAS160A*070	280 to 350	50,14 to 43,6
P1VAS160A*032	128 to 160	109,71 to 95,4
P1VAS160A*020	80 to 100	76,94 to 66,9
P1VAS160A*016	64 to 80	219,65 to 191

* valid for vanes 0, C, Z.

Permitted shaft loadings

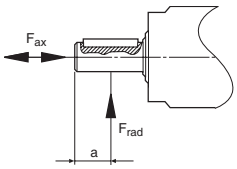

Max. permitted load on output shaft for motors (based on 10 000 000 rpm at input shaft with 90 % probable service life for ball bearings).

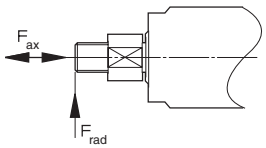

Fig 1: Load on output shaft for basic motor with keyed shaft.

Fig. 2: Load on output shaft for basic motor with threaded shaft.

Motor with keyed shaft

Air Motor Order Code	Radial Frad [N]	Axial Fax [N]	@ Distance a [mm]
P1VAS012 A*N00	340	165	9
P1VAS012 A*550	340	165	9
P1VAS012 A*360	340	165	9
P1VAS012 A*140	340	165	9
P1VAS012 A*090	340	165	9
P1VAS012 A*060	340	165	9
P1VAS012 A*010	340	165	9
P1VAS020 A*G00	510	1170	11
P1VAS020 A*460	510	1170	11
P1VAS020 A*240	510	1170	11
P1VAS020 A*140	510	1170	11
P1VAS020 A*070	510	1170	11
P1VAS020 A*036	510	1170	11
P1VAS020 A*018	510	1170	11
P1VAS020 A*005	510	1170	11
P1VAS030 A*E50	510	1180	13
P1VAS030 A*460	510	1180	13
P1VAS030 A*240	510	1180	13
P1VAS030 A*123	510	1180	13
P1VAS030 A*070	1160	1040	14
P1VAS030 A*036	1160	1040	14
P1VAS030 A*018	1160	1040	14
P1VAS030 A*010	1160	1040	14
P1VAS030 A*005	1160	1040	14
P1VAS060 A*D50	690	1190	14
P1VAS060 A*550	690	1190	14
P1VAS060 A*400	690	1190	14
P1VAS060 A*300	690	1190	14
P1VAS060 A*200	690	1190	14
P1VAS060 A*070	690	1190	14
P1VAS060 A*050	800	2030	16
P1VAS060 A*034	800	2030	16
P1VAS060 A*018	800	2030	16
P1VAS090 A*C60	690	1190	14
P1VAS090 A*520	690	1190	14
P1VAS090 A*367	690	1190	14
P1VAS090 A*285	690	1190	14
P1VAS090 A*190	690	1190	14
P1VAS090 A*065	690	1190	14
P1VAS090 A*047	800	2030	16
P1VAS090 A*031	800	2030	16
P1VAS160 A*960	1470	2790	16
P1VAS160 A*250	1470	2790	16
P1VAS160 A*120	1470	2790	16
P1VAS160 A*070	1560	2730	30
P1VAS160 A*032	1560	2730	30
P1VAS160 A*020	1560	2730	30
P1VAS160 A*016	1470	2790	16

Motor with threaded shaft

Air Motor Order Code	Radial Frad [N]	Axial Fax [N]	@ Distance a [mm]
P1VAS012D*N00	340	110	9
P1VAS012D*550	340	110	9
P1VAS012D*360	340	110	9
P1VAS012D*140	340	110	9
P1VAS012D*090	340	110	9
P1VAS012D*060	340	110	9
P1VAS012D*010	340	110	9
P1VAS020D*G00	510	880	11
P1VAS020D*460	510	880	11
P1VAS020D*240	510	880	11
P1VAS020D*140	510	880	11
P1VAS020D*070	510	880	11
P1VAS020D*036	510	880	11
P1VAS020D*018	510	880	11
P1VAS020D*005	510	880	11
P1VAS030D*E50	510	860	13
P1VAS030D*460	510	860	13
P1VAS030D*240	510	860	13
P1VAS030D*123	510	860	13
P1VAS030D*070	680	820	14
P1VAS030D*036	680	820	14
P1VAS030D*018	680	820	14
P1VAS030D*010	680	820	14
P1VAS030D*005	680	820	14
-	-	-	-
-	-	-	-
-	-	-	-
-	-	-	-
-	-	-	-
-	-	-	-
-	-	-	-
-	-	-	-
-	-	-	-
-	-	-	-
-	-	-	-
-	-	-	-
-	-	-	-
-	-	-	-
-	-	-	-
-	-	-	-
-	-	-	-
-	-	-	-
-	-	-	-
-	-	-	-
-	-	-	-
-	-	-	-
-	-	-	-
* valid for vanes 0, C, Z.	-	-	-

P1V-S Stainless Steel Vane Air Motors with Integrated Planetary Gear boxes

Note:
All technical data are based on a working pressure of 6 bar and with oil lubrification. With oil free operation performances are reduced by 10 to 20%. Speed tolerance accuracy in between clock and anti clockwise directions is ±10%. Note! Inlet and exhaust air flows are critical for reaching the best performances.

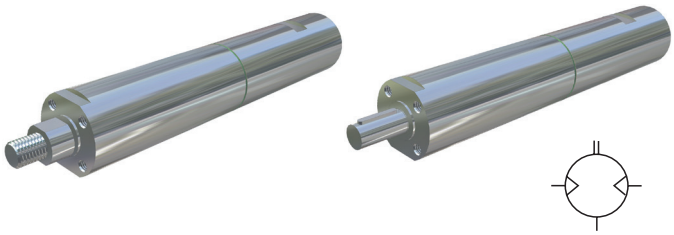

Data for Reversible Air Motor Power 120 watts, with Keyed Shaft

Max power	Free speed	Nominal speed	Nominal troque	Min starting torque	Stall torque	Max adm torque	Air consumption	Supply/ Exhaust	Min pipe	Weight	ATEX	Rotation	Vanne Option	Order Code
[watt]	[rpm]	[rpm]		[Nm]	[Nm]	[Nm]	[m3/min]		[mm]	[kg]				
120	22000	11000	0,10	0,15	0,19	-	0,30	G1/8 | G1/8	6 | 6	0,35	T6 | T80°C	L & R	0, C, Z	**P1VAS012A0N00**
120	5500	2750	0,40	0,60	0,76	-	0,30	G1/8 | G1/8	6 | 6	0,35	T4 | T130°C	L & R	0, C, Z	**P1VAS012A0550**
120	3600	1800	0,60	0,90	1,14	-	0,30	G1/8 | G1/8	6 | 6	0,35	T4 | T130°C	L & R	0, C, Z	**P1VAS012A0360**
120	1400	700	1,60	2,40	3,00	-	0,30	G1/8 | G1/8	6 | 6	0,40	T4 | T130°C	L & R	0, C, Z	**P1VAS012A0140**
120	900	450	2,50	3,80	4,70	-	0,30	G1/8 | G1/8	6 | 6	0,40	T6 | T80°C	L & R	0, C, Z	**P1VAS012A0090**
120	600	300	3,80	-	-	-	0,30	G1/8 | G1/8	6 | 6	0,40	T6 | T80°C	L & R	0, C, Z	**P1VAS012A0060**
120	100	-	-	-	-	-	0,30	G1/8 | G1/8	6 | 6	0,45	T6 | T80°C	L & R	0, C, Z	**P1VAS012A0010**

With Threaded Shaft

120	22000	11000	0,10	0,15	0,19		0,30	G1/8 | G1/8	6 | 6	0,35	T6 | T80°C	-	0, C, Z	**P1VAS012D0N00**
120	5500	2750	0,40	0,60	0,76		0,30	G1/8 | G1/8	6 | 6	0,35	T4 | T130°C	-	0, C, Z	**P1VAS012D0550**
120	3600	1800	0,60	0,90	1,14		0,30	G1/8 | G1/8	6 | 6	0,35	T4 | T130°C	-	0, C, Z	**P1VAS012D0360**
120	1400	700	1,60	2,40	3,00		0,30	G1/8 | G1/8	6 | 6	0,40	T4 | T130°C	-	0, C, Z	**P1VAS012D0140**
120	900	450	2,50	3,80	4,70		0,30	G1/8 | G1/8	6 | 6	0,40	T6 | T80°C	-	0, C, Z	**P1VAS012D0090**
120	600	300	3,80	-	-		0,30	G1/8 | G1/8	6 | 6	0,40	T6 | T80°C	-	0, C, Z	**P1VAS012D0060**
120	100	-	-	-	-		0,30	G1/8 | G1/8	6 | 6	0,45	T6 | T80°C	-	0, C, Z	**P1VAS012D0010**

Details on page 15

Note:
air motor rotation with threaded shaft may be reversed, but when operated anticlockwise, there is a risk that the driven unit may disconnect if it is not locked properly.

Dimensions [mm] 120 watts

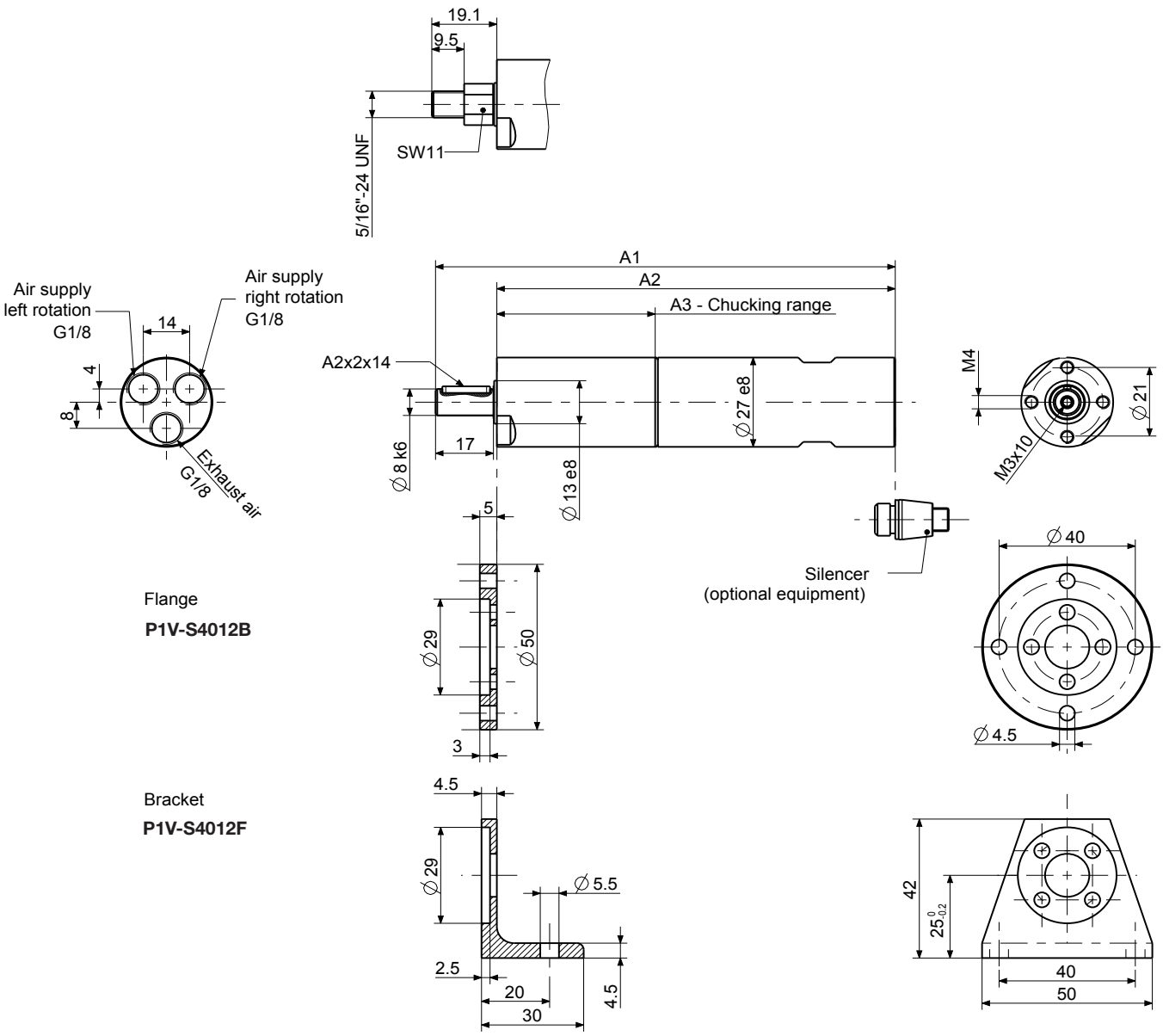

Dimension [mm] 120 watts

A1	A2	A3	Order code		
135	117	46,5	**P1VAS012A*N00**	**P1VAS012A*550**	**P1VAS012A*360**
147,5	129,5	59	**P1VAS012A*140**	**P1VAS012A*090**	**P1VAS012A*060**
160	142	71,5	**P1VAS012A*010**		

* 0, C, Z

P1V-S Stainless Steel Vane Air Motors with Integrated Planetary Gear boxes

Note: All technical data are based on a working pressure of 6 bar and with oil lubrification. With oil free operation performances are reduced by 10 to 20%. Speed tolerance accuracy in between clock and anti clockwise directions is ±10%.
Note! Inlet and exhaust air flows are critical for reaching the best performances.

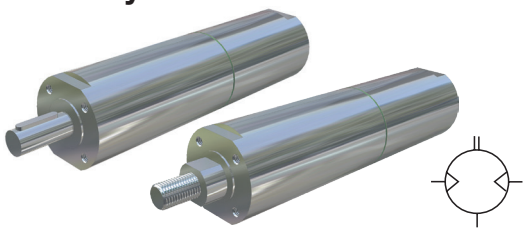

Data for Reversible Air Motor Power 200 watts, with Keyed Shaft

Max power	Free speed	Nominal speed	Nominal troque	Min starting torque	Stall torque	Max adm torque	Air consumption	Supply/ Exhaust	Min pipe	Weight	ATEX	Rotation	Vanne Option	Order Code
[watt]	[rpm]	[rpm]		[Nm]	[Nm]	[Nm]	[m3/min]		[mm]	[kg]				
200	16000	8000	0,24	0,35	0,45	-	0,37	G1/8 | G1/4	10 | 10	0,70	T6 | T80°C	L & R	0, C, Z	**P1VAS020A0G00**
200	4600	2300	0,8	1,20	1,50	-	0,37	G1/8 | G1/4	10 | 10	0,75	T4 | T130°C	L & R	0, C, Z	**P1VAS020A0460**
200	2400	1200	1,6	2,40	3,00	-	0,37	G1/8 | G1/4	10 | 10	0,75	T4 | T130°C	L & R	0, C, Z	**P1VAS020A0240**
200	1400	700	2,7	4,10	5,10	-	0,37	G1/8 | G1/4	10 | 10	0,85	T4 | T130°C	L & R	0, C, Z	**P1VAS020A0140**
200	700	350	5,4	8,20	10,30	-	0,37	G1/8 | G1/4	10 | 10	0,85	T6 | T80°C	L & R	0, C, Z	**P1VAS020A0070**
200	360	180	10,6	15,90	-	20,00	0,37	G1/8 | G1/4	10 | 10	0,85	T6 | T80°C	L & R	0, C, Z	**P1VAS020A0036**
100	180	90	10,5	15,00	-	20,00	0,27	G1/8 | G1/4	10 | 10	0,85	T6 | T80°C	L & R	0, C, Z	**P1VAS020A0018**
180	50	-	-	-	-	20,00	0,34	G1/8 | G1/4	10 | 10	0,95	T6 | T80°C	L & R	0, C, Z	**P1VAS020A0005**

With Treaded Shaft

200	16000	8000	0,24	0,35	0,45	-	0,37	G1/8 | G1/4	10 | 10	0,70	T6 | T80°C	-	0, C, Z	**P1VAS020D0G00**
200	4600	2300	0,8	1,20	1,50	-	0,37	G1/8 | G1/4	10 | 10	0,75	T4 | T130°C	-	0, C, Z	**P1VAS020D0460**
200	2400	1200	1,6	2,40	3,00	-	0,37	G1/8 | G1/4	10 | 10	0,75	T4 | T130°C	-	0, C, Z	**P1VAS020D0240**
200	1400	700	2,7	4,10	5,10	-	0,37	G1/8 | G1/4	10 | 10	0,85	T4 | T130°C	-	0, C, Z	**P1VAS020D0140**
200	700	350	5,4	8,20	10,30	-	0,37	G1/8 | G1/4	10 | 10	0,85	T6 | T80°C	-	0, C, Z	**P1VAS020D0070**
200	360	180	10,6	15,90	-	20,00	0,37	G1/8 | G1/4	10 | 10	0,85	T6 | T80°C	-	0, C, Z	**P1VAS020D0036**
100	180	90	10,5	15,00	-	20,00	0,27	G1/8 | G1/4	10 | 10	0,85	T6 | T80°C	-	0, C, Z	**P1VAS020D0018**
180	50	-	-	-	-	20,00	0,34	G1/8 | G1/4	10 | 10	0,95	T6 | T80°C	-	0, C, Z	**P1VAS020D0005**

Max. adm torque is restriction from the gear box Details on page 15

Note:
air motor rotation with threaded shaft may be reversed, but when operated anticlockwise, there is a risk that the driven unit may disconnect if it is not locked properly.

Data for Reversible Air Motor Power 300 watts, with Keyed Shaft

Max power	Free speed	Nominal speed	Nominal troque	Min starting torque	Stall torque	Max adm torque	Air consumption	Supply/ Exhaust	Min pipe	Weight	ATEX	Rotation	Vanne Option	Order Code
[watt]	[rpm]	[rpm]		[Nm]	[Nm]	[Nm]	[m3/min]		[mm]	[kg]				
300	14500	7250	0,40	0,60	0,76	-	0,37	G1/8 | G1/4	10 | 10	0,70	T6 | T80°C	L & R	0, C, Z	**P1VAS030A0E50**
300	4600	2300	1,20	1,90	2,20	-	0,37	G1/8 | G1/4	10 | 10	0,75	T4 | T130°C	L & R	0, C, Z	**P1VAS030A0460**
300	2400	1200	2,40	3,60	4,50	-	0,37	G1/8 | G1/4	10 | 10	0,75	T4 | T130°C	L & R	0, C, Z	**P1VAS030A0240**
300	1230	615	4,65	6,95	8,80	-	0,37	G1/8 | G1/4	10 | 10	0,85	T4 | T130°C	L & R	0, C, Z	**P1VAS030A0123**
300	700	350	8,15	12,25	15,50	-	0,37	G1/8 | G1/4	10 | 10	0,85	T6 | T80°C	L & R	0, C, Z	**P1VAS030A0070**
300	360	180	15,90	23,80	30,20	-	0,37	G1/8 | G1/4	10 | 10	0,85	T6 | T80°C	L & R	0, C, Z	**P1VAS030A0036**
130	180	90	13,80	21,00	26,20	-	0,27	G1/8 | G1/4	10 | 10	0,85	T6 | T80°C	L & R	0, C, Z	**P1VAS030A0018**
300	100	-	-	-	-	36,00	0,34	G1/8 | G1/4	10 | 10	0,95	T6 | T80°C	L & R	0, C, Z	**P1VAS030A0010**
280	50	-	-	-	-	36,00	0,47	G1/4 | G1/4	10 | 10	1,25	T6 | T80°C	L & R	0, C, Z	**P1VAS030A0005**

With Treaded Shaft

300	14500	7250	0,40	0,60	0,76	-	0,47	G1/4 | G1/4	10 | 10	1,00	T6 | T80°C	-	0, C, Z	**P1VAS030D0E50**
300	4600	2300	1,20	1,90	2,20	-	0,47	G1/4 | G1/4	10 | 10	1,05	T3 | T195°C	-	0, C, Z	**P1VAS030D0460**
300	2400	1200	2,40	3,60	4,50	-	0,47	G1/4 | G1/4	10 | 10	1,05	T4 | T130°C	-	0, C, Z	**P1VAS030D0240**
300	1230	615	4,65	6,95	8,80	-	0,47	G1/4 | G1/4	10 | 10	1,10	T4 | T130°C	-	0, C, Z	**P1VAS030D0123**
300	700	350	8,15	12,25	15,50	-	0,47	G1/4 | G1/4	10 | 10	1,15	T6 | T80°C	-	0, C, Z	**P1VAS030D0070**
300	360	180	15,90	23,80	30,20	-	0,47	G1/4 | G1/4	10 | 10	1,15	T6 | T80°C	-	0, C, Z	**P1VAS030D0036**
130	180	90	13,80	21,00	26,20	-	0,28	G1/4 | G1/4	10 | 10	1,15	T6 | T80°C	-	0, C, Z	**P1VAS030D0018**
300	100	-	-	-	-	36,00	0,47	G1/4 | G1/4	10 | 10	1,25	T6 | T80°C	-	0, C, Z	**P1VAS030D0010**
280	50	-	-	-	-	36,00	0,47	G1/4 | G1/4	10 | 10	1,25	T6 | T80°C	-	0, C, Z	**P1VAS030D0005**

Max. adm torque is restriction from the gear box Details on page 15

Note:
air motor rotation with threaded shaft may be reversed, but when operated anticlockwise, there is a risk that the driven unit may disconnect if it is not locked properly.

Dimensions [mm] 200, 300 watts

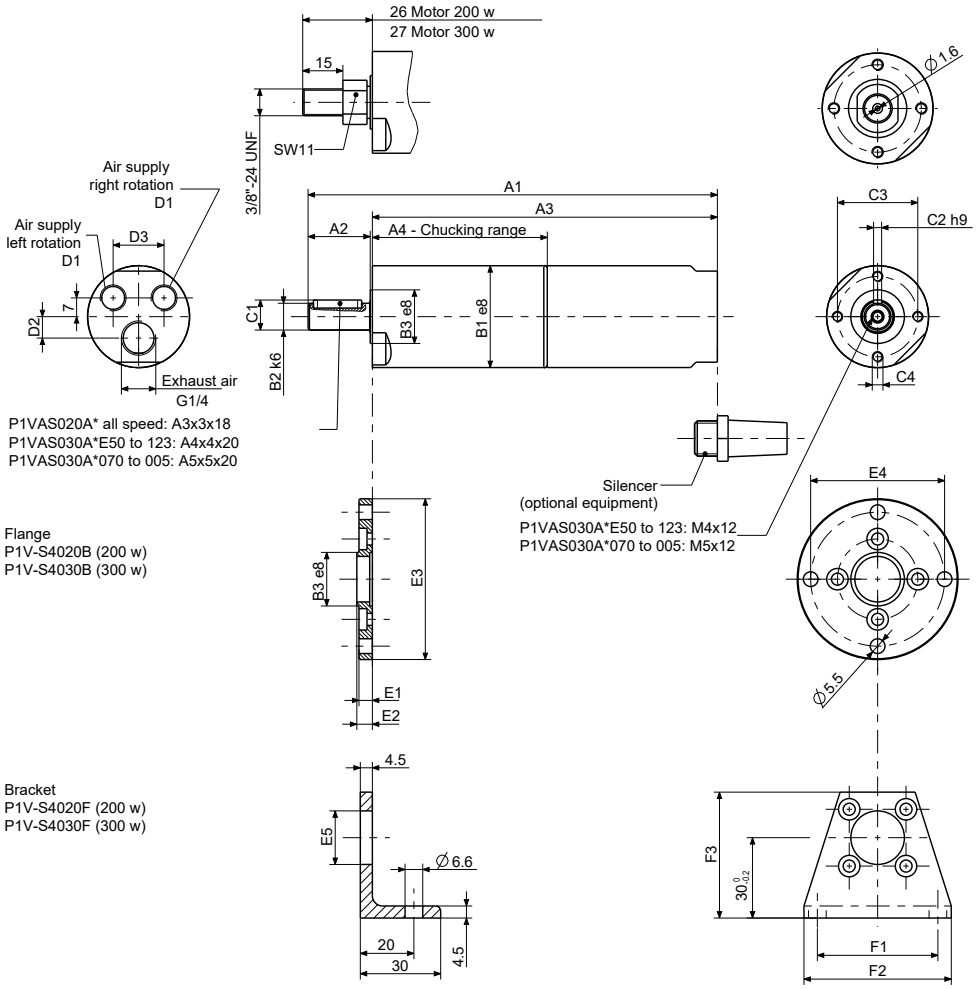

Dimension [mm] 200 watts

* 0, C, Z

A1	A2	A3	A4	B1	B2	B3	C1	C2	C3	C4	Order code			
152,5	23	128,5	65	38	10	20	11,2	3	30	M4	**P1VAS020A*G00**	**P1VAS020A*460**	**P1VAS020A*240**	
168	23	144,5	81	38	10	20	11,2	3	30	M4	**P1VAS020A*140**	**P1VAS020A*070**	**P1VAS020A*036**	**P1VAS020A*018**
184,5	23	160,5	97	38	10	20	11,2	3	30	M4	**P1VAS020A*005**			

D1	D2	D3	B3	E1	E2	E3	E4	E5	F1	F2	F3	Order code			
G1/8	8	19	20	5	5,8	60	50	17	45	55	47	**P1VAS020A*G00**	**P1VAS020A*460**	**P1VAS020A*240**	
G1/8	8	19	20	5	5,8	60	50	17	45	55	47	**P1VAS020A*140**	**P1VAS020A*070**	**P1VAS020A*036**	**P1VAS020A*018**
G1/8	8	19	20	5	5,8	60	50	17	45	55	47	**P1VAS020A*005**			
G1/4	11	20	24	6	6,8	65	55	21	50	60	48	**P1VAS030A*010**	**P1VAS030A*005**		

Dimension [mm] 300 watts

A1	A2	A3	A4	B1	B2	B3	C1	C2	C3	C4	Order code		
171	27	143	66	42	12	24	13,5	4	34	M5	**P1VAS030A*E50**	**P1VAS030A*460**	**P1VAS030A*240**
187	27	159	83	42	12	24	13,5	4	34	M5	**P1VAS030A*123**		
191	30	159	83	42	14	24	16	5	34	M5	**P1VAS030A*070**	**P1VAS030A*036**	**P1VAS030A*018**
196	30	164	83	42	14	24	16	5	34	M5	**P1VAS030A*010**	**P1VAS030A*005**	

D1	D2	D3	B3	E1	E2	E3	E4	E5	F1	F2	F3	Order code		
G1/4	11	20	20	5	6,8	60	50	17	45	55	47	**P1VAS030A*E50**	**P1VAS030A*460**	**P1VAS030A*240**
G1/4	11	20	20	5	6,8	60	50	17	45	55	47	**P1VAS030A*123**		
G1/4	11	20	24	6	6,8	65	55	21	50	60	48	**P1VAS030A*070**	**P1VAS030A*036**	**P1VAS030A*018**
G1/4	11	20	24	6	6,8	65	55	21	50	60	48	**P1VAS030A*010**	**P1VAS030A*005**	

P1V-S Stainless Steel Vane Air Motors with Integrated Planetary Gear boxes

Note: All technical data are based on a working pressure of 6 bar and with oil lubrification. With oil free operation performances are reduced by 10 to 20%. Speed tolerance accuracy in between clock and anti clockwise directions is ±10%.
Note! Inlet and exhaust air flows are critical for reaching the best performances.

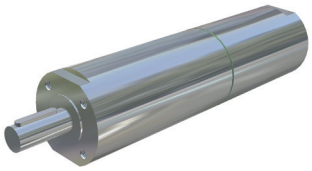

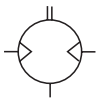

Data for Reversible Air Motor Power 600 watts, with Keyed Shaft

Max power	Free speed	Nominal speed	Nominal troque	Min starting torque	Stall torque	Max adm torque	Air consumption	Supply/ Exhaust	Min pipe	Weight	ATEX	Rotation	Vanne Option	Order Code
[watt]	[rpm]	[rpm]		[Nm]	[Nm]	[Nm]	[m3/min]		[mm]	[kg]				
600	13500	6750	0,85	1,25	1,60	-	0,85	G3/8 | G1/2	12 | 12	2,20	T6 | T80°C	L & R	0, C, Z	**P1VAS060A0D50**
600	5500	2750	2,00	3,10	3,90	-	0,85	G3/8 | G1/2	12 | 12	2,70	T6 | T80°C	L & R	0, C, Z	**P1VAS060A0550**
600	4000	2000	2,80	4,30	5,40	-	0,85	G3/8 | G1/2	12 | 12	2,30	T3 | T195°C	L & R	0, C, Z	**P1VAS060A0400**
600	3000	1500	3,80	5,70	7,20	-	0,85	G3/8 | G1/2	12 | 12	2,30	T4 | T130°C	L & R	0, C, Z	**P1VAS060A0300**
600	2000	1000	5,70	8,50	10,80	-	0,85	G3/8 | G1/2	12 | 12	2,30	T4 | T130°C	L & R	0, C, Z	**P1VAS060A0200**
600	700	350	16,30	24,50	31,10	-	0,85	G3/8 | G1/2	12 | 12	2,60	T6 | T80°C	L & R	0, C, Z	**P1VAS060A0070**
600	500	250	22,90	34,30	43,50	-	0,85	G3/8 | G1/2	12 | 12	2,70	T6 | T80°C	L & R	0, C, Z	**P1VAS060A0050**
600	340	170	33,70	50,60	64,00	-	0,85	G3/8 | G1/2	12 | 12	2,70	T6 | T80°C	L & R	0, C, Z	**P1VAS060A0034**
300	180	90	31,80	47,70	60,40	-	0,55	G3/8 | G1/2	12 | 12	2,70	T6 | T80°C	L & R	0, C, Z	**P1VAS060A0018**

Max. adm torque is restriction from the gear box 2,7 Details on page 15

Data for Reversible Air Motor Power 900 watts, with Keyed Shaft

Max power	Free speed	Nominal speed	Nominal troque	Min starting torque	Stall torque	Max adm torque	Air consumption	Supply/ Exhaust	Min pipe	Weight	ATEX	Rotation	Vanne Option	Order Code
[watt]	[rpm]	[rpm]		[Nm]	[Nm]	[Nm]	[m3/min]		[mm]	[kg]				
900	12600	6300	1,35	2,00	2,60	-	1,40	G3/8 | G1/2	12 | 12	3,55	T6 | T80°C	L & R	0, C, Z	**P1VAS090A0C60**
900	5200	2600	3,30	4,90	6,20	-	1,40	G3/8 | G1/2	12 | 12	3,55	T6 | T80°C	L & R	0, C, Z	**P1VAS090A0520**
900	3670	1835	4,60	7,00	8,90	-	1,40	G3/8 | G1/2	12 | 12	3,65	T3 | T195°C	L & R	0, C, Z	**P1VAS090A0367**
900	2850	1425	6,00	9,00	11,40	-	1,40	G3/8 | G1/2	12 | 12	3,65	T4 | T130°C	L & R	0, C, Z	**P1VAS090A0285**
900	1900	950	9,00	14,50	17,10	-	1,40	G3/8 | G1/2	12 | 12	3,65	T4 | T130°C	L & R	0, C, Z	**P1VAS090A0190**
900	650	325	26,40	39,60	50,20	-	1,40	G3/8 | G1/2	12 | 12	3,95	T6 | T80°C	L & R	0, C, Z	**P1VAS090A0065**
900	470	235	36,50	54,80	69,40	-	1,40	G3/8 | G1/2	12 | 12	3,95	T6 | T80°C	L & R	0, C, Z	**P1VAS090A0047**
900	310	155	55,40	83,10	105,30	-	1,40	G3/8 | G1/2	12 | 12	3,95	T6 | T80°C	L & R	0, C, Z	**P1VAS090A0031**

Max. adm torque is restriction from the gear box Details on page 15

Data for Reversible Air Motor Power 1600 watts, with Keyed Shaft

1600	9600	4800	3,10	4,70	6,05	-	1,60	G1/2 | G3/4	19 | 19	5,90	T6 | T80°C	L & R	0, C, Z	**P1VAS160A0960**
1600	2500	1250	12,20	18,30	23,20	-	1,60	G1/2 | G3/4	19 | 19	6,10	T3 | T195°C	L & R	0, C, Z	**P1VAS160A0250**
1600	1200	600	25,40	38,20	48,30	-	1,60	G1/2 | G3/4	19 | 19	6,10	T4 | T130°C	L & R	0, C, Z	**P1VAS160A0120**
1600	700	350	43,60	65,40	82,90	-	1,60	G1/2 | G3/4	19 | 19	6,70	T4 | T130°C	L & R	0, C, Z	**P1VAS160A0070**
1600	320	160	95,40	143,20	181,40	-	1,60	G1/2 | G3/4	19 | 19	6,70	T4 | T130°C	L & R	0, C, Z	**P1VAS160A0032**
700	200	100	66,90	100,00	125,00	-	1,60	G1/2 | G3/4	19 | 19	6,70	T6 | T80°C	L & R	0, C, Z	**P1VAS160A0020**
1600	160	80	191,00	-	-	220,00	1,60	G1/2 | G3/4	19 | 19	8,00	T6 | T80°C	L & R	0, C, Z	**P1VAS160A0016**

Max. adm torque is restriction from the gear box Details on page 15

Note:
air motor rotation with threaded shaft may be reversed, but when operated anticlockwise, there is a risk that the driven unit may disconnect if it is not locked properly.

Dimensions [mm] 600 watts

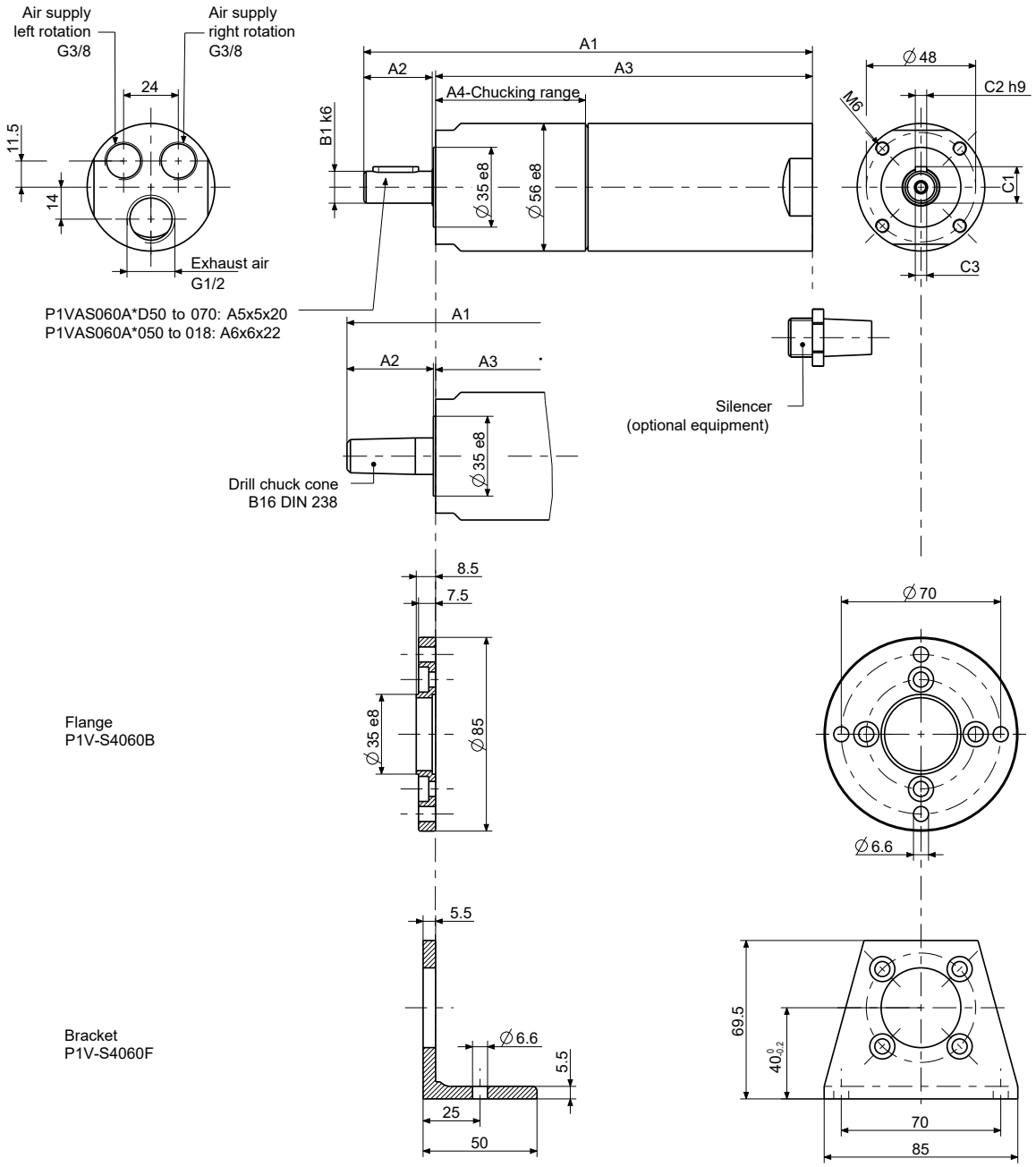

Dimension [mm] 600 watts

A1	A2	A3	A4	B1	C1	C2	C3	Order code			
197	30,5	165,5	66	14	16	5	M5x12	**P1VAS060A*D50**	**P1VAS060A*400**	**P1VAS060A*300**	**P1VAS060A*200**
215	30,5	183,5	84	14	16	5	M5x12	**P1VAS060A*550**	**P1VAS060A*070**		
217	35	180	80,5	19	21,5	6	M6x12	**P1VAS060A*050**	**P1VAS060A*034**	**P1VAS060A*018**	

* 0, C, Z

Dimensions [mm] 900 watts

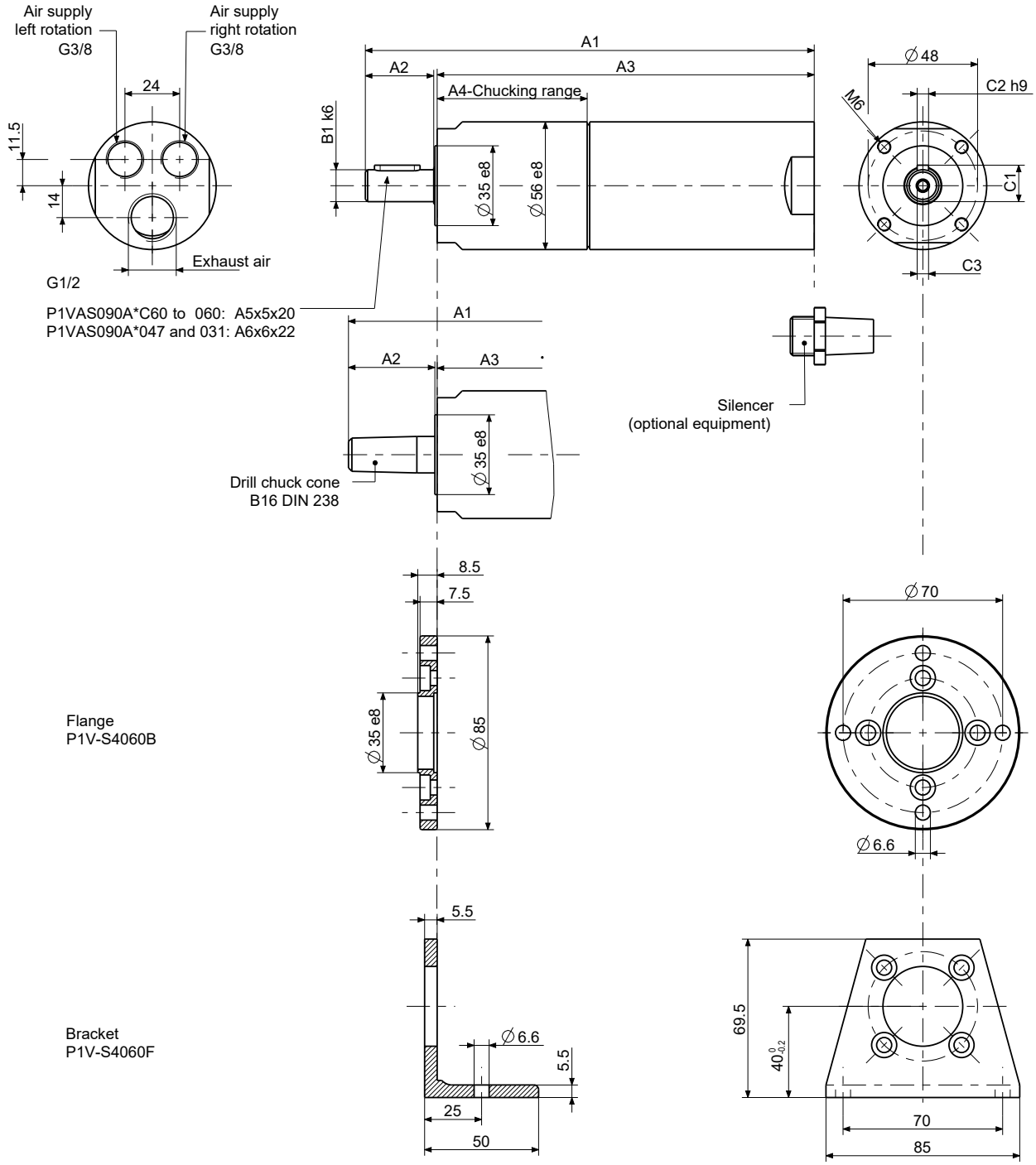

Dimension [mm] 900 watts

A1	A2	A3	A4	B1	C1	C2	C3	Order code			
222	30,5	190,5	66	14	16	5	M5x12	**P1VAS090A*C60**	**P1VAS090A*520**	**P1VAS090A*367**	**P1VAS090A*285**
240	30,5	208,5	84	14	16	5	M5x12	**P1VAS090A*190**	**P1VAS090A*065**		
242	35	205	80,5	19	21,5	6	M6x12	**P1VAS090A*047**	**P1VAS090A*031**		

* 0, C, Z

Dimensions [mm] 1600 watts

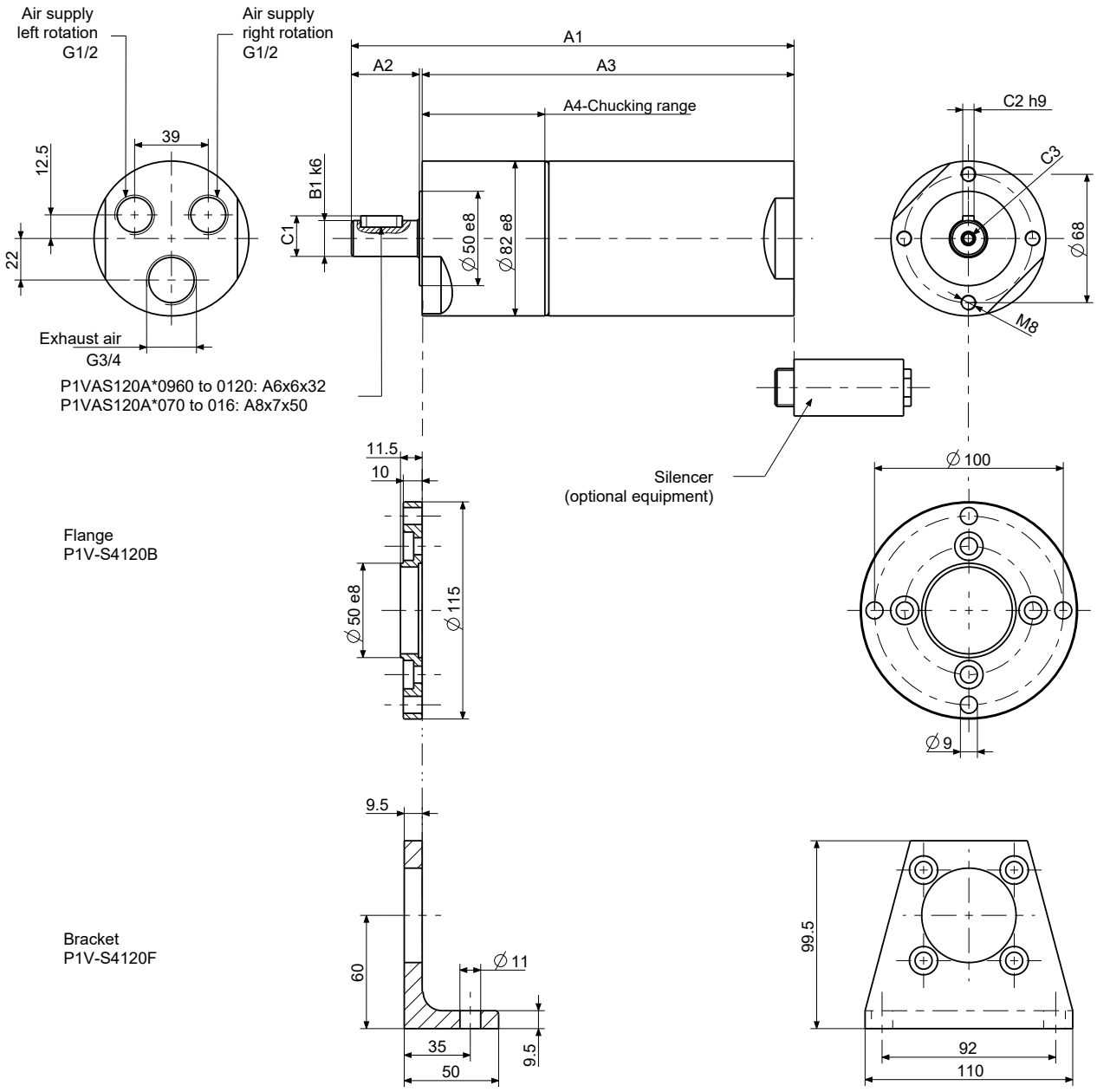

Dimension [mm] 1600 watts

A1	A2	A3	A4	B1	C1	C2	C3	Order code		
235	35	197	65	19	21,5	6	M6x15	**P1VAS160A*960**	**P1VAS160A*250**	**P1VAS160A*120**
268	60	205	73	28	31	8	M10x20	**P1VAS160A*070**	**P1VAS160A*032**	**P1VAS160A*020**
311,5	61,5	248,5	116,5	28	31	8	M10x20	**P1VAS160A*016**		

* 0, C, Z

Service kits

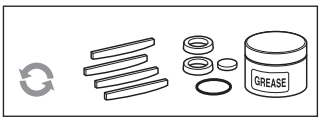

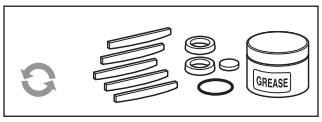

Optional function "0"

Service kits, vanes for intermittent lubrication-free operation

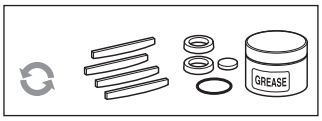

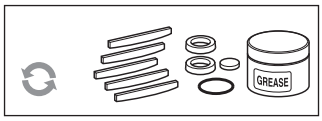

Optional function "C"

Service kits, vanes for continuous lubrication-free operation

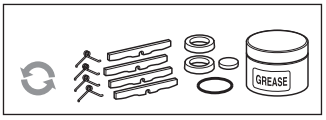

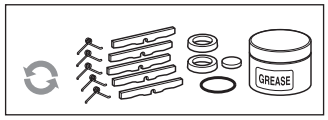

Optional function "Z"

Service kits, spring-loaded vanes for intermittent lubrication-free operation

Lubrication and service life

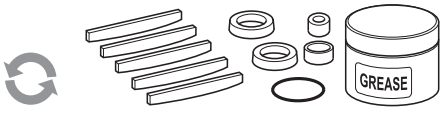

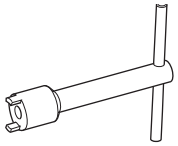

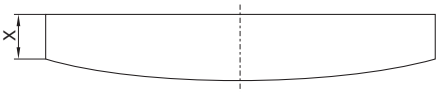

Air motor	Dimensions on new vanes X (mm), type of vanes			
	0	Z	C	M
P1VAS012	4.2	4.2	4.2	4.2
P1VAS020	6.5	6.0	6.0	6.0
P1VAS030	6.8	6.2	6.8	6.2
P1VAS060	9.0	9.0	9.0	9.0
P1VAS090	X	X	X	X
P1VAS160	14.7	14.0	14.0	14.0

Air motor	Dimensions on vanes X (mm), type of vanes			
	0	Z	C	M
P1VAS012	3.3	3.3	3.3	3.3
P1VAS020	5.8	5.3	5.3	5.3
P1VAS030	6.0	5.2	6.0	5.2
P1VAS060	6.0	6.0	6.0	6.0
P1VAS090	X	X	X	X
P1VAS160	14.2	13.5	13.5	13.5

The following normal service intervals should be applied to in order to guarantee problem-free operation in air motors working continuously at load speeds.

Intermittent lubrication-free operation of motors with standard vanes, option 0

Duty cycle :	70%
Max. duration of intermittent use :	15 minutes
Filtering 40 µm :	750 hours of operation*
Filtering 5 µm :	1,000 hours of operation*

Continuous lubricated operation of motors with standard vanes, option 0

Duty cycle :	Continuous
Quantity of oil :	1 drop per m^3 of air
Filtering 40 µm :	1,000 hours of operation*
Filtering 5 µm :	2,000 hours of operation*

Note! After 1000 hours of operation, the grease in the planetary gearbox must be changed

Continuous lubrication-free operation of motors equipped with vanes, option C

Duty cycle :	Continuous
Filtering 40 µm :	750 hours of operation*
Filtering 5 µm :	1,000 hours of operation*

The first service is due after approximately 500 hours of operation. After the first service, the service interval is determined by the degree of vane wear*. The table below shows new dimensions and the minimum dimensions of worn vanes.



* The specified hours of operation apply when the motor is running at the speed corresponding to maximum power (load speed).
This is approximately half free speed.If the motor operates at higher speeds, the service interval is shorter.If the motor operates at lower speeds, the service interval is longer.

Service kits

Air Motor Code		New Worm x Value [mm]		0 | Standard vannes	C | Lubrification-free	Z | Spring loaded
				Service Kit Order Code		
P1VAS012A*N00	**P1VAS012D*N00**	4.2	3.3	P1VAS6/4455801C	P1VAS6/4455801D	P1VAS6/4455804C
P1VAS012A*550	**P1VAS012D*550**			P1VAS6/4455801G	P1VAS6/4455801H	P1VAS6/4455804B
P1VAS012A*360	**P1VAS012D*360**			P1VAS6/4455801G	P1VAS6/4455801H	P1VAS6/4455804B
P1VAS012A*140	**P1VAS012D*140**			P1VAS6/4455801G	P1VAS6/4455801H	P1VAS6/4455804B
P1VAS012A*090	**P1VAS012D*090**			P1VAS6/4455801G	P1VAS6/4455801H	P1VAS6/4455804B
P1VAS012A*060	**P1VAS012D*060**			P1VAS6/4455801G	P1VAS6/4455801H	P1VAS6/4455804B
P1VAS012A*010	**P1VAS012D*010**			P1VAS6/4455801G	P1VAS6/4455801H	P1VAS6/4455804B
P1VAS020A*G00	**P1VAS020D*G00**	6.5 to 6	5.8 to 5.3	P1VAS6/4447851E	P1VAS6/4447853C	P1VAS6/4447854C
P1VAS020A*460	**P1VAS020D*460**			P1VAS6/4447851F	P1VAS6/4447853B	P1VAS6/4447854B
P1VAS020A*240	**P1VAS020D*240**			P1VAS6/4447851A	P1VAS6/4447853B	P1VAS6/4447854B
P1VAS020A*140	**P1VAS020D*140**			P1VAS6/4447851A	P1VAS6/4447853B	P1VAS6/4447854B
P1VAS020A*070	**P1VAS020D*070**			P1VAS6/4447851A	P1VAS6/4447853B	P1VAS6/4447854B
P1VAS020A*036	**P1VAS020D*036**			P1VAS6/4447851F	P1VAS6/4447853B	P1VAS6/4447854B
P1VAS020A*018	**P1VAS020D*018**			P1VAS6/4447851F	P1VAS6/4447853B	P1VAS6/4447854B
P1VAS020A*005	**P1VAS020D*005**			P1VAS6/4447851F	P1VAS6/4447853B	P1VAS6/4447854B
P1VAS030A*E50	**P1VAS030D*E50**	6.8 to 6.2	6 to 5.2	P1VAS6/4447861L	P1VAS6/4447863C	P1VAS6/4447864C
P1VAS030A*460	**P1VAS030D*460**			P1VAS6/4447861M	P1VAS6/4447863B	P1VAS6/4447864B
P1VAS030A*240	**P1VAS030D*240**			P1VAS6/4447861M	P1VAS6/4447863B	P1VAS6/4447864B
P1VAS030A*123	**P1VAS030D*123**			P1VAS6/4447861M	P1VAS6/4447863B	P1VAS6/4447864B
P1VAS030A*070	**P1VAS030D*070**			P1VAS6/4447861M	P1VAS6/4447863B	P1VAS6/4447864B
P1VAS030A*036	**P1VAS030D*036**			P1VAS6/4447861M	P1VAS6/4447863B	P1VAS6/4447864B
P1VAS030A*018	**P1VAS030D*018**			P1VAS6/4447861M	P1VAS6/4447863B	P1VAS6/4447864B
P1VAS030A*010	**P1VAS030D*010**			P1VAS6/4447861M	P1VAS6/4447863B	P1VAS6/4447864B
P1VAS030A*005	**P1VAS030D*005**			P1VAS6/4447861M	P1VAS6/4447863B	P1VAS6/4447864B
P1VAS060A*D50	**-**	9	6	P1VAS6/4447871K	P1VAS6/4447873E	P1VAS6/4447874E
P1VAS060A*550	**-**			P1VAS6/4447871K	P1VAS6/4447873E	P1VAS6/4447874E
P1VAS060A*400	**-**			P1VAS6/4447871M	P1VAS6/4447873C	P1VAS6/4447874C
P1VAS060A*300	**-**			P1VAS6/4447871M	P1VAS6/4447873C	P1VAS6/4447874C
P1VAS060A*200	**-**			P1VAS6/4447871M	P1VAS6/4447873C	P1VAS6/4447874C
P1VAS060A*070	**-**			P1VAS6/4447871M	P1VAS6/4447873C	P1VAS6/4447874C
P1VAS060A*050	**-**			P1VAS6/4447871L	P1VAS6/4447873D	P1VAS6/4447874D
P1VAS060A*034	**-**			P1VAS6/4447871L	P1VAS6/4447873D	P1VAS6/4447874D
P1VAS060A*018	**-**			P1VAS6/4447871L	P1VAS6/4447873D	P1VAS6/4447874D
P1VAS090A*C60	**-**			P1VAS6/4449191G	P1VAS6/1191563A	P1VAS6/1191564A
P1VAS090A*520	**-**			P1VAS6/4449191G	P1VAS6/1191563A	P1VAS6/1191564A
P1VAS090A*367	**-**			P1VAS6/4449191E	P1VAS6/1191563B	P1VAS6/1191564B
P1VAS090A*285	**-**			P1VAS6/4449191E	P1VAS6/1191563B	P1VAS6/1191564B
P1VAS090A*190	**-**			P1VAS6/4449191E	P1VAS6/1191563B	P1VAS6/1191564B
P1VAS090A*065	**-**			P1VAS6/4449191E	P1VAS6/1191563B	P1VAS6/1191564B
P1VAS090A*047	**-**			P1VAS6/4449191F	P1VAS6/1191563C	P1VAS6/1191654C
P1VAS090A*031	**-**			P1VAS6/4449191F	P1VAS6/1191563C	P1VAS6/1191654C
P1VAS160A*960	**-**	14.7 to 14	14.2 to 13.5	P1VAS6/4447881D	P1VAS6/4447883D	P1VAS6/4447884D
P1VAS160A*250	**-**			P1VAS6/4447881E	P1VAS6/4447883E	P1VAS6/4447884E
P1VAS160A*120	**-**			P1VAS6/4447881E	P1VAS6/4447883E	P1VAS6/4447884E
P1VAS160A*070	**-**			P1VAS6/4447881F	P1VAS6/4447883F	P1VAS6/4447884F
P1VAS160A*032	**-**			P1VAS6/4447881F	P1VAS6/4447883F	P1VAS6/4447884F
P1VAS160A*020	**-**			P1VAS6/4447881C	P1VAS6/4447883C	P1VAS6/4447884C
P1VAS160A*016	**-**			P1VAS6/4447881D	P1VAS6/4447883D	P1VAS6/4447884D

*0, C or Z

Order code key

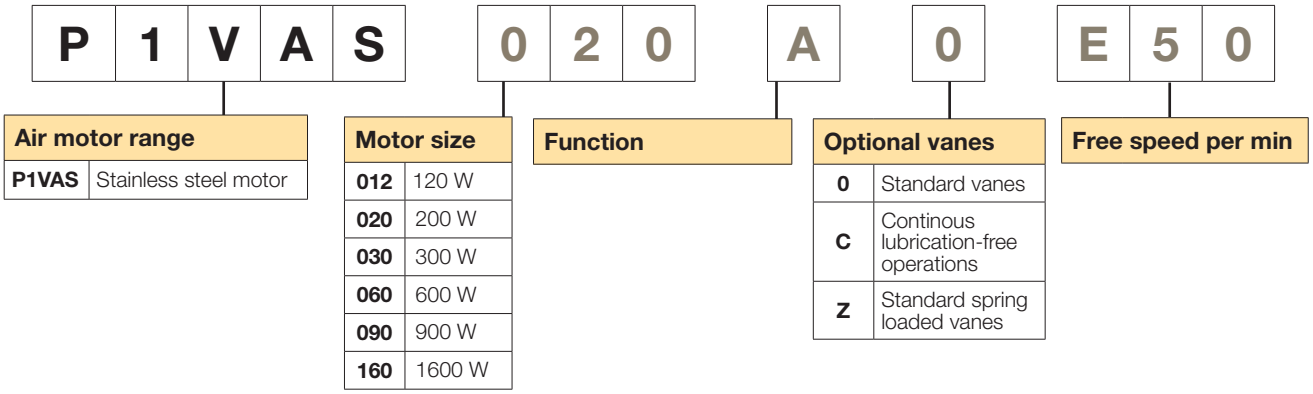

Air motor range	
P1VAS	Stainless steel motor

Motor size	
012	120 W
020	200 W
030	300 W
060	600 W
090	900 W
160	1600 W

Function

Optional vanes	
0	Standard vanes
C	Continous lubrication-free operations
Z	Standard spring loaded vanes

Free speed per min

This model code can not be used for creating new part numbers except for optional vanes.
All possible combinations between motor size, function and free speed are in the previous pages.

Parker Worldwide

Europe, Middle East, Africa

AE – United Arab Emirates, Dubai
Tel: +971 4 8127100
parker.me@parker.com

AT – Austria, Wiener Neustadt
Tel: +43 (0)2622 23501-0
parker.austria@parker.com

AT – Eastern Europe, Wiener Neustadt
Tel: +43 (0)2622 23501 900
parker.easteurope@parker.com

AZ – Azerbaijan, Baku
Tel: +994 50 2233 458
parker.azerbaijan@parker.com

BE/LU – Belgium, Nivelles
Tel: +32 (0)67 280 900
parker.belgium@parker.com

BG – Bulgaria, Sofia
Tel: +359 2 980 1344
parker.bulgaria@parker.com

BY – Belarus, Minsk
Tel: +48 (0)22 573 24 00
parker.poland@parker.com

CH – Switzerland, Etoy
Tel: +41 (0)21 821 87 00
parker.switzerland@parker.com

CZ – Czech Republic, Klecany
Tel: +420 284 083 111
parker.czechrepublic@parker.com

DE – Germany, Kaarst
Tel: +49 (0)2131 4016 0
parker.germany@parker.com

DK – Denmark, Ballerup
Tel: +45 43 56 04 00
parker.denmark@parker.com

ES – Spain, Madrid
Tel: +34 902 330 001
parker.spain@parker.com

FI – Finland, Vantaa
Tel: +358 (0)20 753 2500
parker.finland@parker.com

FR – France, Contamine s/Arve
Tel: +33 (0)4 50 25 80 25
parker.france@parker.com

GR – Greece, Athens
Tel: +30 210 933 6450
parker.greece@parker.com

HU – Hungary, Budaörs
Tel: +36 23 885 470
parker.hungary@parker.com

IE – Ireland, Dublin
Tel: +353 (0)1 466 6370
parker.ireland@parker.com

IT – Italy, Corsico (MI)
Tel: +39 02 45 19 21
parker.italy@parker.com

KZ – Kazakhstan, Almaty
Tel: +7 7273 561 000
parker.easteurope@parker.com

NL – The Netherlands, Oldenzaal
Tel: +31 (0)541 585 000
parker.nl@parker.com

NO – Norway, Asker
Tel: +47 66 75 34 00
parker.norway@parker.com

PL – Poland, Warsaw
Tel: +48 (0)22 573 24 00
parker.poland@parker.com

PT – Portugal, Leca da Palmeira
Tel: +351 22 999 7360
parker.portugal@parker.com

RO – Romania, Bucharest
Tel: +40 21 252 1382
parker.romania@parker.com

RU – Russia, Moscow
Tel: +7 495 645-2156
parker.russia@parker.com

SE – Sweden, Spånga
Tel: +46 (0)8 59 79 50 00
parker.sweden@parker.com

SK – Slovakia, Banská Bystrica
Tel: +421 484 162 252
parker.slovakia@parker.com

SL – Slovenia, Novo Mesto
Tel: +386 7 337 6650
parker.slovenia@parker.com

TR – Turkey, Istanbul
Tel: +90 216 4997081
parker.turkey@parker.com

UA – Ukraine, Kiev
Tel: +48 (0)22 573 24 00
parker.poland@parker.com

UK – United Kingdom, Warwick
Tel: +44 (0)1926 317 878
parker.uk@parker.com

ZA – South Africa, Kempton Park
Tel: +27 (0)11 961 0700
parker.southafrica@parker.com

North America

CA – Canada, Milton, Ontario
Tel: +1 905 693 3000

US – USA, Cleveland
Tel: +1 216 896 3000

Asia Pacific

AU – Australia, Castle Hill
Tel: +61 (0)2-9634 7777

CN – China, Shanghai
Tel: +86 21 2899 5000

HK – Hong Kong
Tel: +852 2428 8008

IN – India, Mumbai
Tel: +91 22 6513 7081-85

JP – Japan, Tokyo
Tel: +81 (0)3 6408 3901

KR – South Korea, Seoul
Tel: +82 2 559 0400

MY – Malaysia, Shah Alam
Tel: +60 3 7849 0800

NZ – New Zealand, Mt Wellington
Tel: +64 9 574 1744

SG – Singapore
Tel: +65 6887 6300

TH – Thailand, Bangkok
Tel: +662 186 7000

TW – Taiwan, Taipei
Tel: +886 2 2298 8987

South America

AR – Argentina, Buenos Aires
Tel: +54 3327 44 4129

BR – Brazil, Sao Jose dos Campos
Tel: +55 800 727 5374

CL – Chile, Santiago
Tel: +56 2 623 1216

MX – Mexico, Toluca
Tel: +52 72 2275 4200

European Product Information Centre
Free phone: 00 800 27 27 5374
(from AT, BE, CH, CZ, DE, DK, EE, ES, FI, FR, IE, IL, IS, IT, LU, MT, NL, NO, PL, PT, RU, SE, SK, UK, ZA)

© 2019 Parker Hannifin Corporation. All rights reserved.

Catalogue PDE2554TCUK - V6 - October 2019

Parker Hannifin Ltd.
Tachbrook Park Drive
Tachbrook Park, Warwick CV34 6TU
United Kingdom
Tel.: +44 (0) 1926 317 878
Fax: +44 (0) 1926 317 855
parker.uk@parker.com
www.parker.com

Your local authorized Parker distributor